Polo 1995 ➤

General body repairs, exterior

Edition 07.2000

Protected by copyright. Copying for private or commercial purposes, in part or in whole, is not permitted unless authorised by Volkswagen AG. Volkswagen AG does not guarantee or accept any liability with respect to the correctness of information in this document. Copyright by Volkswagen AG.

satelettronica

List of Workshop Manual Repair GroupsList of Workshop Manual Repair GroupsList of Workshop Manual Repair Groups

Polo 1995 ➤

General body repairs, exterior

Repair Group

50 - Body front
55 - Bonnet, Flaps
57 - Front doors/Door components/Central locking system
58 - Rear doors/Door components
60 - Sliding/tilting roof
63 - Bumpers
64 - Glazing
66 - Exterior equipment

Protected by copyright. Copying for private or commercial purposes, in part or in whole, is not permitted unless authorised by Volkswagen AG. Volkswagen AG does not guarantee or accept any liability with respect to the correctness of information in this document. Copyright by Volkswagen AG.

satelettronica

Technical information should always be available to the foremen and mechanics, because their careful and constant adherence to the instructions is essential to ensure vehicle road-worthiness and safety. In addition, the normal basic safety precautions for working on motor vehicles must, as a matter of course, be observed.

All rights reserved.
No reproduction without prior agreement from publisher.

Copyright © 2010 Volkswagen AG, Wolfsburg

Contents

50 - Body front . . . 1

1 Body - front . . . 1
1.1 Body - front . . . 1
1.2 Body - front > 09.99 . . . 1
1.3 Removing and installing lock carrier with attachments . . . 1
1.4 Removing and installing skirt . . . 3
1.5 Removing and installing front wing . . . 4

2 Body, front 10.99 > . . . 6
2.1 Body, front 10.99 > . . . 6
2.2 Tools . . . 6
2.3 Lock carrier with attachments - Assembly overview . . . 7
2.4 Removing and installing lock carrier with attachments . . . 8
2.5 Lock carrier - service position . . . 10
2.6 Front wing - Assembly overview . . . 11
2.7 Wing dimensions . . . 13
2.8 Noise insulation (petrol engine) - Assembly overview . . . 14
2.9 Noise insulation (Diesel engine) - Assembly overview . . . 15

55 - Bonnet, Flaps . . . 16

1 Bonnet . . . 16
1.1 Bonnet . . . 16
1.2 Assembly overview . . . 16
1.3 Removing and installing bonnet 10.99 > . . . 18
1.4 Removing gas strut . . . 19
1.5 Releasing gas from strut . . . 20
1.6 Adjusting bonnet . . . 20
1.7 Removing and installing bonnet lock cable . . . 21
1.8 Removing and installing bonnet lock . . . 23

2 Rear boot lid/tailgate . . . 23
2.1 Rear boot lid/tailgate . . . 23
2.2 Tools . . . 23
2.3 Removing gas strut . . . 24
2.4 Releasing gas from strut . . . 25
2.5 Adjusting boot lid/tailgate . . . 25
2.6 Removing and installing tailgate/boot lid lock . . . 27
2.7 Removing and installing lock cylinder . . . 29
2.8 Maintaining common key locking . . . 32

3 Tank flap unit . . . 32
3.1 Tank flap unit . . . 32
3.2 Tools . . . 32
3.3 Assembly overview . . . 33
3.4 Removing and installing tank flap unit . . . 34
3.5 Dismantling and assembling tank flap unit . . . 36

57 - Front doors/Door components/Central locking system . . . 38

1 Doors front . . . 38
1.1 Doors front . . . 38
1.2 Tools . . . 38
1.3 Assembly overview . . . 39
1.4 Removing and installing door . . . 42
1.5 Adjusting door . . . 42
1.6 Front door 09.96 > . . . 43
1.7 Removing and installing front door 09.96 > . . . 46
1.8 Adjusting front door 09.96 > . . . 46

Protected by copyright. Copying for private or commercial purposes, in part or in whole, is not permitted unless authorised by Volkswagen AG. Volkswagen AG does not guarantee or accept any liability with respect to the correctness of information in this document. Copyright by Volkswagen AG.
satelettronica

1.9 Driver's door of postal vehicles . . . 47
1.10 Door lock - Assembly overview . . . 49
1.11 Removing and installing door lock . . . 50
1.12 Removing inner release handle . . . 52
1.13 Door handle - Assembly overview . . . 52
1.14 Removing and installing door handle . . . 54
1.15 Maintaining common key locking . . . 56
1.16 Door handle with inner profile key - Assembly overview . . . 57
1.17 Removing and installing lock cylinder with inner profile key . . . 59
1.18 Door seals . . . 63
1.19 Removing and installing door inner seal . . . 64

2 Central locking . . . 65
2.1 Central locking . . . 65
2.2 Assembly overview . . . 65
2.3 New coupling and junction piece for pipe connector . . . 68
2.4 Removing and installing bi-pressure pump . . . 68
2.5 Removing and installing tank flap positioning element . . . 69
2.6 Removing and installing front door positioning element . . . 69
2.7 Removing and installing rear door lock positioning element . . . 71
2.8 Removing and installing boot lid/tailgate positioning element . . . 72
2.9 Activating individual door opening of central locking system . . . 72
2.10 Functional check of central locking . . . 73
2.11 Functional check of central locking with radio remote control . . . 73
2.12 Matching ignition keys to radio wave remote control . . . 74
2.13 Removing and installing batteries for the main key with radio wave remote control . . . 74

58 - Rear doors/Door components . . . 75

1 Rear door . . . 75
1.1 Rear door . . . 75
1.2 Tools . . . 75
1.3 Assembly overview . . . 76
1.4 Removing and installing door . . . 79
1.5 Rear door 09.96 > . . . 80
1.6 Removing and installing rear door 09.96 > . . . 83
1.7 Adjusting door . . . 84
1.8 Door lock - Assembly overview . . . 85
1.9 Removing and installing door lock . . . 86
1.10 Removing inner release handle . . . 88
1.11 Door handle - Assembly overview . . . 89
1.12 Removing and installing door handle . . . 90
1.13 Door seals . . . 91
1.14 Removing and installing door inner seal . . . 92

60 - Sliding/tilting roof . . . 93

1 Sliding/tilting roof with glass panel > 09.99 . . . 93
1.1 Sliding/tilting roof with glass panel > 09.99 . . . 93
1.2 Sliding/tilting roof with glass panel - Assembly overview . . . 93
1.3 Removing sliding/tilting roof glass panel . . . 97
1.4 Adjusting panel seal . . . 97
1.5 Installing sliding/tilting roof glass panel . . . 98
1.6 Removing sliding headlining . . . 98
1.7 Installing sliding headlining . . . 99
1.8 Checking parallel running . . . 99
1.9 Adjusting parallel running . . . 99
1.10 Adjusting height of sliding/tilting roof glass panel . . . 100
1.11 Removing and installing carrier unit . . . 101
1.12 Setting "Zero position" on sliding/tilting roof drive . . . 103

Protected by copyright. Copyright by Volkswagen AG. Volkswagen AG does not guarantee or accept any liability with respect to the correctness of information in this document. Copyright by Volkswagen AG.
satelettronica

1.13 Cleaning water drain hoses . . . 104
1.14 Sliding/tilting sunroof with glass panel 10.99 > . . . 106
1.15 Function . . . 106
1.16 Sliding/tilting roof with glass panel - Assembly overview . . . 107
1.17 Removing sliding/tilting sunroof glass panel . . . 111
1.18 Installing sliding/tilting sunroof glass panel . . . 111
1.19 Sliding/tilting roof glass panel (height adjustment) . . . 112
1.20 Adjusting panel seal . . . 113
1.21 Renewing panel seal . . . 114
1.22 Removing wind deflector . . . 115
1.23 Removing and installing sliding headlining . . . 115
1.24 Removing sliding/tilting sunroof preselector switch . . . 116
1.25 Removing drive for sliding/tilting sunroof . . . 117
1.26 Adjusting drive for sliding/tilting sunroof ("0" position) . . . 117
1.27 Checking parallel running . . . 117
1.28 Adjusting parallel running . . . 118
1.29 Removing coulisse guide . . . 119
1.30 Removing and installing carrier unit . . . 120
1.31 Removing guide and cable . . . 122
1.32 Cleaning water drain hoses . . . 124

2 Fabric folding roof . . . 126
2.1 Fabric folding roof . . . 126
2.2 Fabric folding roof assembly overview . . . 126
2.3 Removing and installing fabric folding roof complete . . . 130
2.4 Removing and installing folding roof with cover and trim panel . . . 130
2.5 Renewing fabric folding roof cover or trim panel . . . 133
2.6 Tensioning fabric folding roof . . . 134
2.7 Checking parallel running . . . 135
2.8 Adjusting parallel running . . . 135
2.9 Renewing roof spoiler . . . 135

63 - Bumpers . . . 137

1 Front bumper >09.99 . . . 137
1.1 Front bumper >09.99 . . . 137
1.2 Assembly overview . . . 137

2 Front bumper 10.99 > . . . 140
2.1 Front bumper 10.99 > . . . 140
2.2 Bumper cover - Assembly overview . . . 140
2.3 Removing and installing bumper cover . . . 143
2.4 Bumper carrier - Assembly overview . . . 144

3 Rear bumper . . . 145
3.1 Rear bumper . . . 145
3.2 Rear bumper > 09.99 . . . 145
3.3 Assembly overview . . . 145

4 Rear bumper 10.99 > . . . 147
4.1 Rear bumper 10.99 > . . . 147
4.2 Bumper cover - Assembly overview . . . 147
4.3 Removing and installing bumper cover . . . 149
4.4 Bumper carrier - Assembly overview . . . 150

64 - Glazing . . . 152

1 Flush bonded windows . . . 152
1.1 Flush bonded windows . . . 152
1.2 Tools . . . 152
1.3 Materials . . . 153
1.4 Windscreen - Assembly overview . . . 154

Protected by copyright. Copyright by Volkswagen AG. Volkswagen AG does not guarantee or accept any liability with respect to the correctness of information in this document.
satelettronica

1.5 Removing and installing plenum chamber trim . . . 156
1.6 Removing windscreen . . . 158
1.7 Installing windscreen . . . 159
1.8 Side window - Assembly overview . . . 160
1.9 Removing undamaged side window . . . 160
1.10 Removing broken side window . . . 162
1.11 Installing side window . . . 162
1.12 Rear window - Assembly overview . . . 163
1.13 Removing undamaged rear window . . . 163
1.14 Removing broken rear window . . . 165
1.15 Installing rear window . . . 165
1.16 Preparing old undamaged window for glazing . . . 166
1.17 Preparing new window for glazing . . . 167
1.18 Preparing body flange for glazing . . . 168
1.19 Installation instructions . . . 169
1.20 Curing time . . . 169
1.21 Touching up paint damage . . . 170
1.22 Cleaning off surplus adhesive sealing material . . . 170

2 Door windows . . . 171
2.1 Door windows . . . 171
2.2 Front door window - Assembly overview . . . 171
2.3 Removing and installing window slot seal . . . 172
2.4 Removing door window . . . 173
2.5 Adjusting door window . . . 174
2.6 Removing and installing window lifter . . . 174
2.7 Servicing electric window lifters . . . 175
2.8 Rear door window - Assembly overview . . . 178
2.9 Removing and installing door window . . . 179
2.10 Fitting door window to window lifter . . . 181
2.11 Removing and installing window lifters . . . 181
2.12 Removing and installing triangular window . . . 183

66 - Exterior equipment . . . 184

1 Roof moulding >09.99 . . . 184
1.1 Roof moulding >09.99 . . . 184
1.2 Removing and installing moulding for roof . . . 184
1.3 Removing and installing roof moulding for door . . . 185

2 Trim >09.99 . . . 186
2.1 Trim >09.99 . . . 186
2.2 Removing and installing radiator grille with trim frame . . . 186

3 Protective strips . . . 188
3.1 Protective strips . . . 188
3.2 Renewing side protective strips . . . 188

4 Removing and installing wheel housing liner . . . 190
4.1 Removing and installing wheel housing liner . . . 190

5 Rear view mirror >09.99 . . . 191
5.1 Rear view mirror >09.99 . . . 191
5.2 Tools . . . 191
5.3 Assembly overview . . . 192

6 Rear view mirror 10.99 > . . . 194
6.1 Rear view mirror 10.99 > . . . 194
6.2 Removing mirror housing . . . 194

7 Spoiler >09.99 . . . 195
7.1 Spoiler >09.99 . . . 195
7.2 Removing and installing front spoiler . . . 195

8 Rear spoiler . . . 196

Protected by copyright. Copyright by Volkswagen AG. Copyright by Volkswagen AG. Volkswagen AG does not guarantee or accept any liability with respect to the correctness of information in this document. Copyright by Volkswagen AG. Reproduction, in part or in whole, is prohibited unless authorised by Volkswagen AG.
satelettronica

8.1 Rear spoiler 196
8.2 Tools 196
8.3 Rear spoiler 197
8.4 Assembly overview 197
8.5 Removing and installing rear spoiler 10.99 > 198

Protected by copyright. Copying for private or commercial purposes, in part or in whole, is not permitted unless authorised by Volkswagen AG. Volkswagen AG does not guarantee or accept any liability with respect to the correctness of information in this document. Copyright by Volkswagen AG.

satelettronica

Protected by copyright. Copying for private or commercial purposes, in part or in whole, is not permitted unless authorised by Volkswagen AG. Volkswagen AG does not guarantee or accept any liability with respect to the correctness of information in this document. Copyright by Volkswagen AG.

satelettronica

50 - Body front

1 - Body - front

1.1 - Body - front

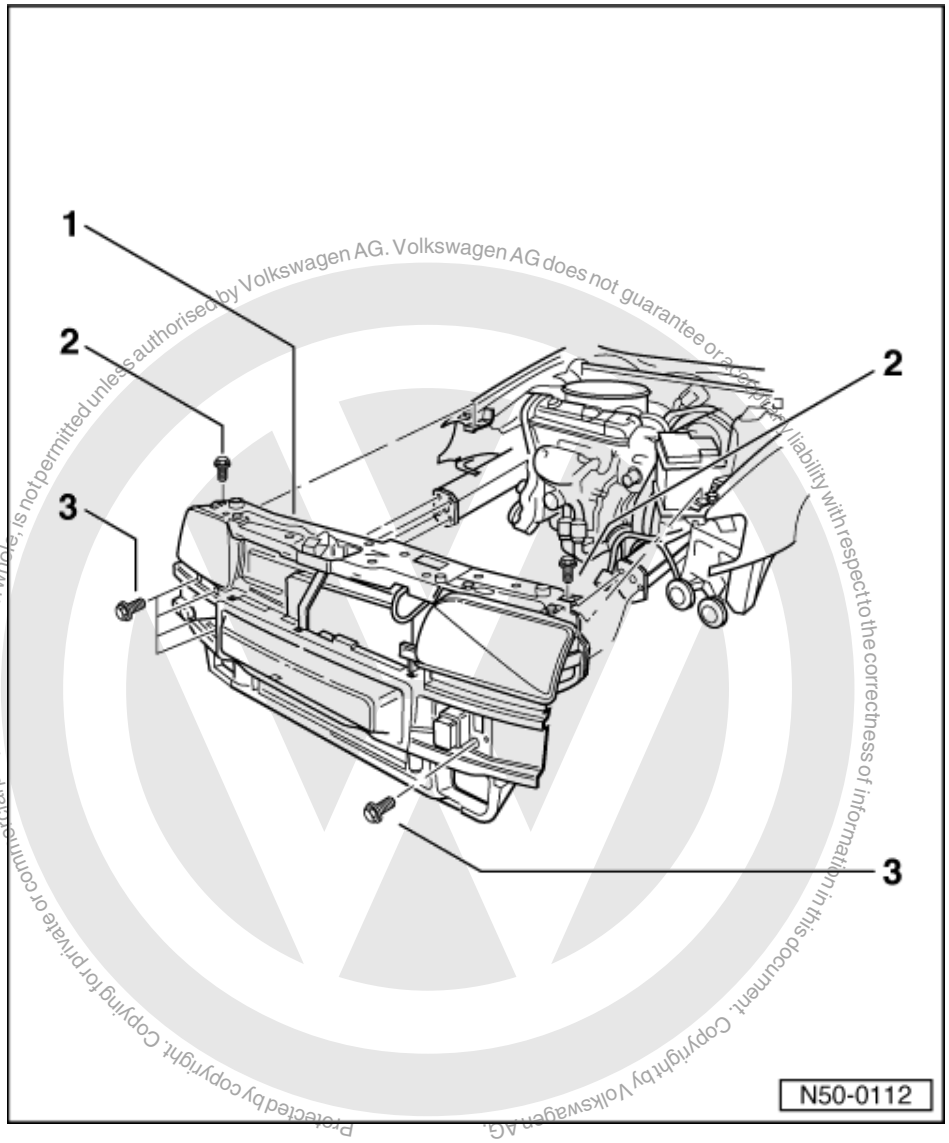

Protected by copyright. Copyright for private or commercial purposes, in part or in whole, is not permitted unless authorised by Volkswagen AG. Volkswagen AG does not guarantee or accept any liability with respect to the correctness of information in this document. Copyright by Volkswagen AG.

1.2 - Body - front > 09.99

1.3 - Removing and installing lock carrier with attachments

- Disconnect connectors and coolant hoses. Unhook cable for bonnet lock.
- Remove front bumper => Page 137 .
- Loosen refrigerant line clamps (only vehicles with air conditioning system).
- Remove combi-bolts - 2 - and hexagon bolts - 3 -.

satelettronica

- Pull off lock carrier with attachments.

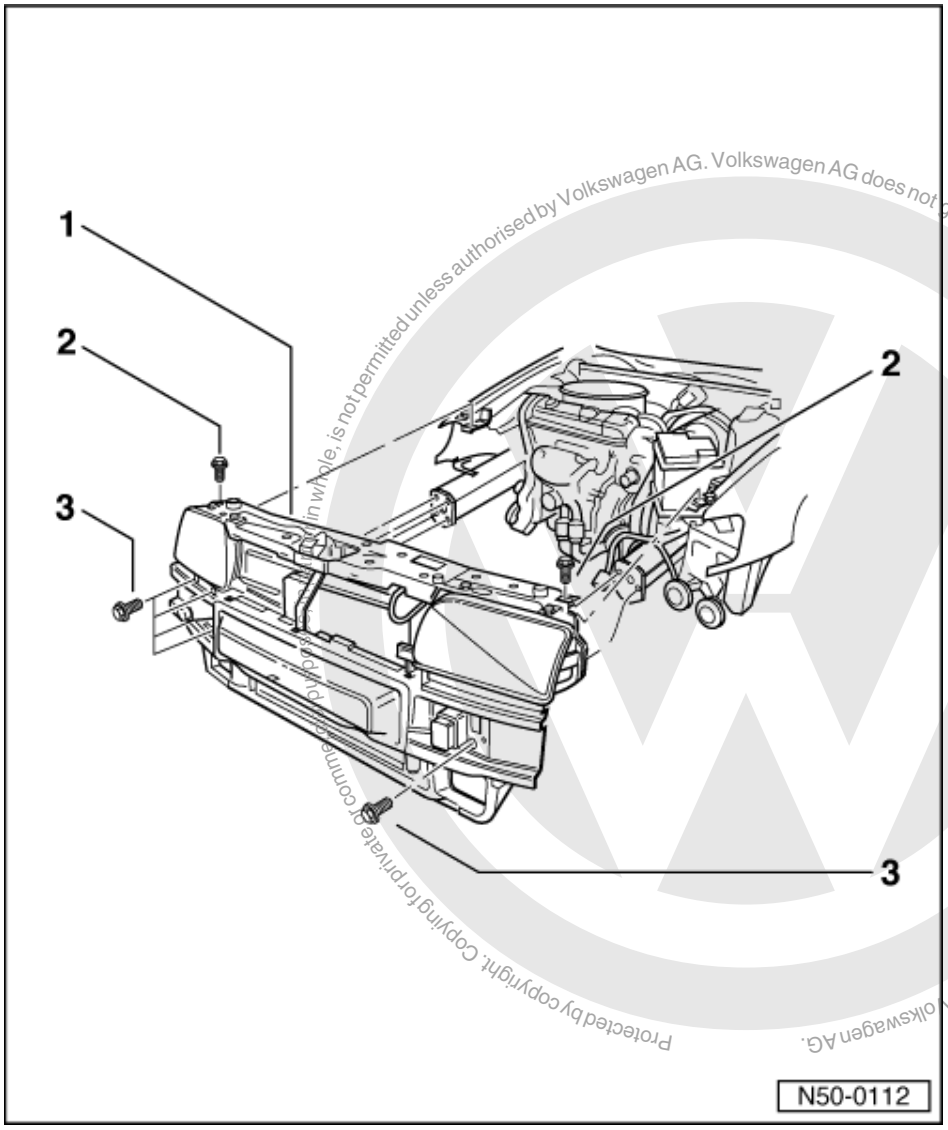

Protected by copyright. Copying for private or commercial purposes, in whole, is not permitted unless authorised by Volkswagen AG. Volkswagen AG does not guarantee or accept any liability with respect to the correctness of information in this document. Copyright by Volkswagen AG.

satelettronica

1 Lock carrier with attachments
- Must be installed stress-free

2 Combi-bolt
- 5 Nm

3 Hexagon head bolt
- 23 Nm

1.4 - Removing and installing skirt

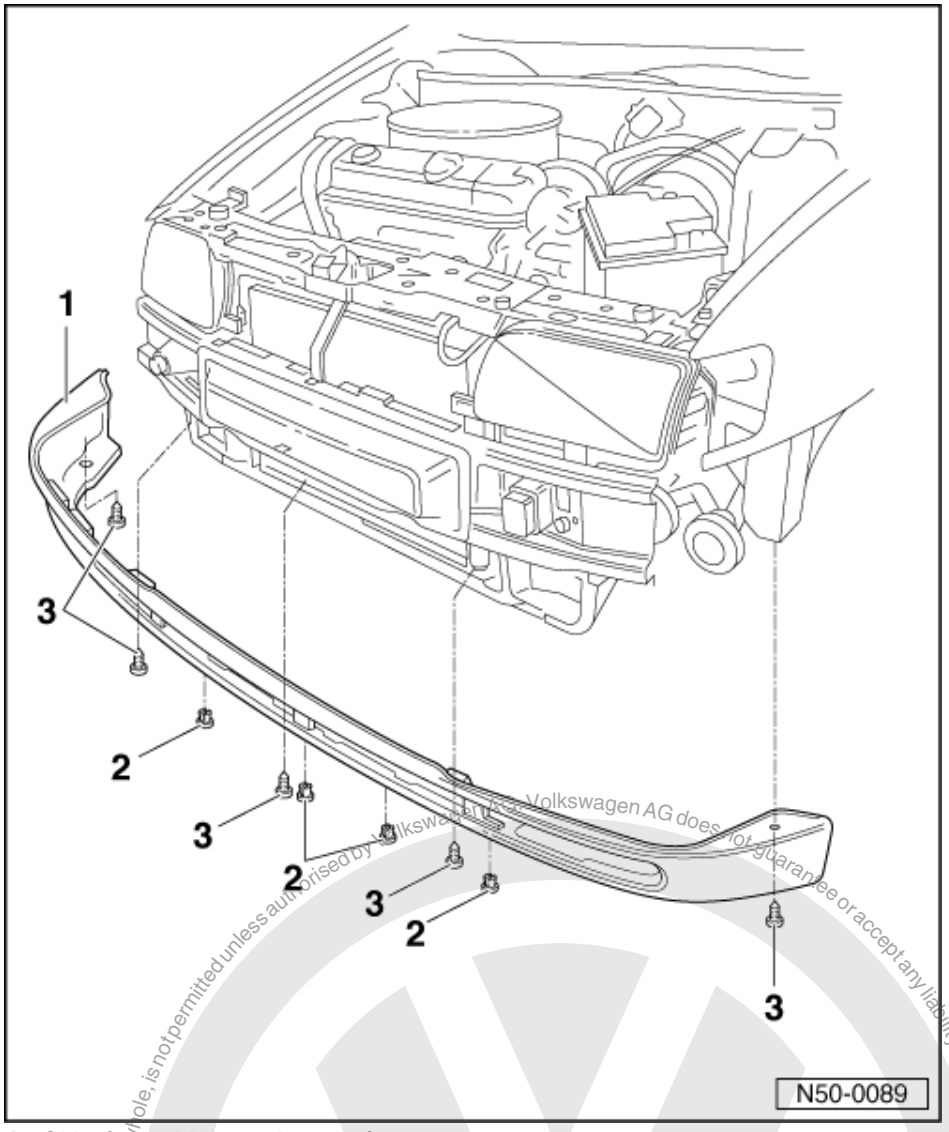

1 Skirt (not with large bumper)
- In body-colour
- Removing: Unclip air guide grille, lever out spreader rivets - 2 - and remove combi-bolts - 3 -. Take off skirt - 1 -.

2 Spreader rivet

3 Combi-bolt
- 5 Nm

Protected by copyright. Copying for private or commercial purposes, in whole, is not permitted unless authorised by Volkswagen AG. Volkswagen AG does not guarantee or accept any liability with respect to the correctness of information in this document. Copyright by Volkswagen AG.
satelettronica

1.5 - Removing and installing front wing

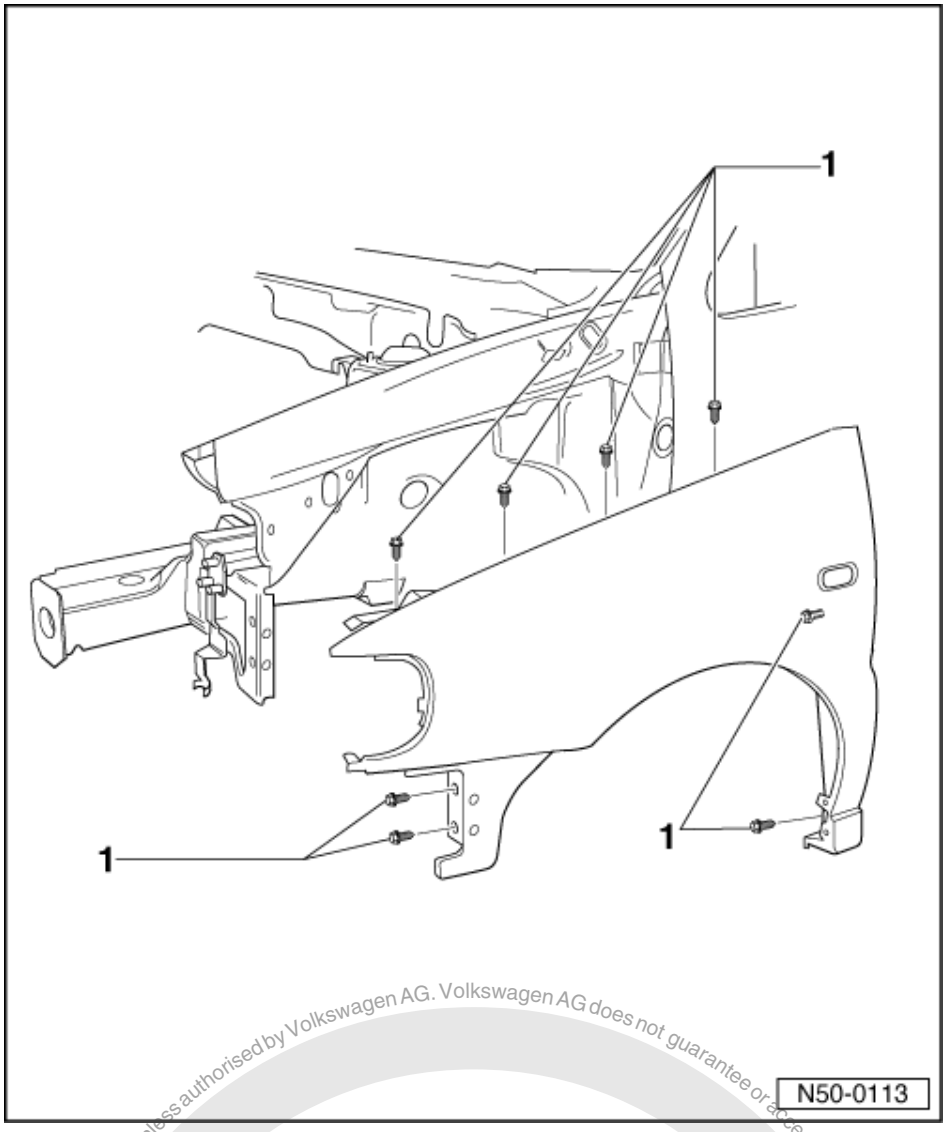

- Remove radiator grille with trim frame, front bumper and wheel housing liner.
- Remove hexagon bolts -1-.
- Heat wing in area of A-pillar with a hot air blower and pull wing off (if necessary cut through PVC with an upholstery knife - this requires help from a second mechanic).

Protected by copyright. Copying for private or commercial purposes, in part or in whole, is not permitted unless authorised by Volkswagen AG. Volkswagen AG does not guarantee or accept any liability with respect to the correctness of information in this document. Copyright by Volkswagen AG.

satelettronica

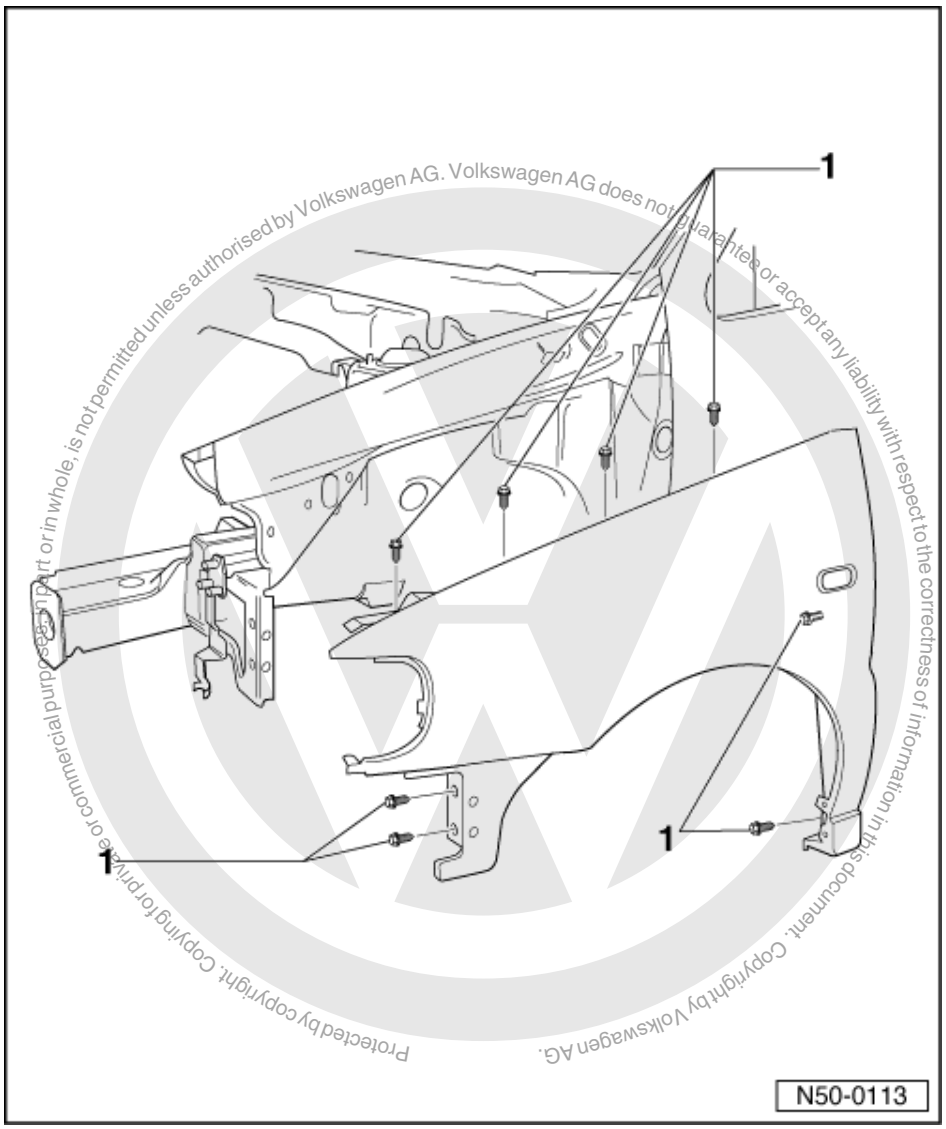

Protected by copyright. Copying for private or commercial purposes, in part or in whole, is not permitted unless authorised by Volkswagen AG. Volkswagen AG does not guarantee or accept any liability with respect to the correctness of information in this document. Copyright by Volkswagen AG.

satelettronica

Note:

PVC must only be heated lightly and briefly. PVC must not change in colour or blister.

Installing

Before bolting on wing, each point of bolting in area of wheel housing/A-pillar must be given a zinc packing AKL 381 035 50.

2 - Body, front 10.99 >

2.1 - Body, front 10.99 >

2.2 - Tools

Special tools, workshop equipment, testers, measuring instruments and auxiliary items required

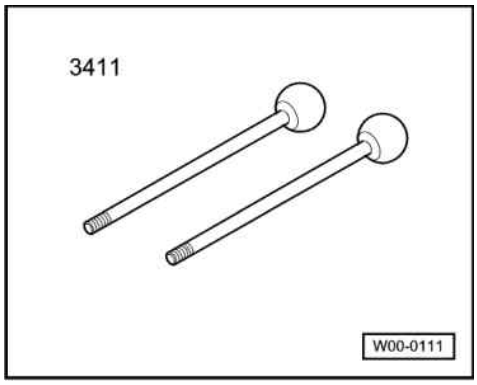

- -> 3411 Guide rods

Protected by copyright. Copying for private or commercial purposes, in part or in whole, is not permitted unless authorised by Volkswagen AG. Volkswagen AG does not guarantee or accept any liability with respect to the correctness of information in this document. Copyright by Volkswagen AG.
satelettronica

2.3 - Lock carrier with attachments - Assembly overview

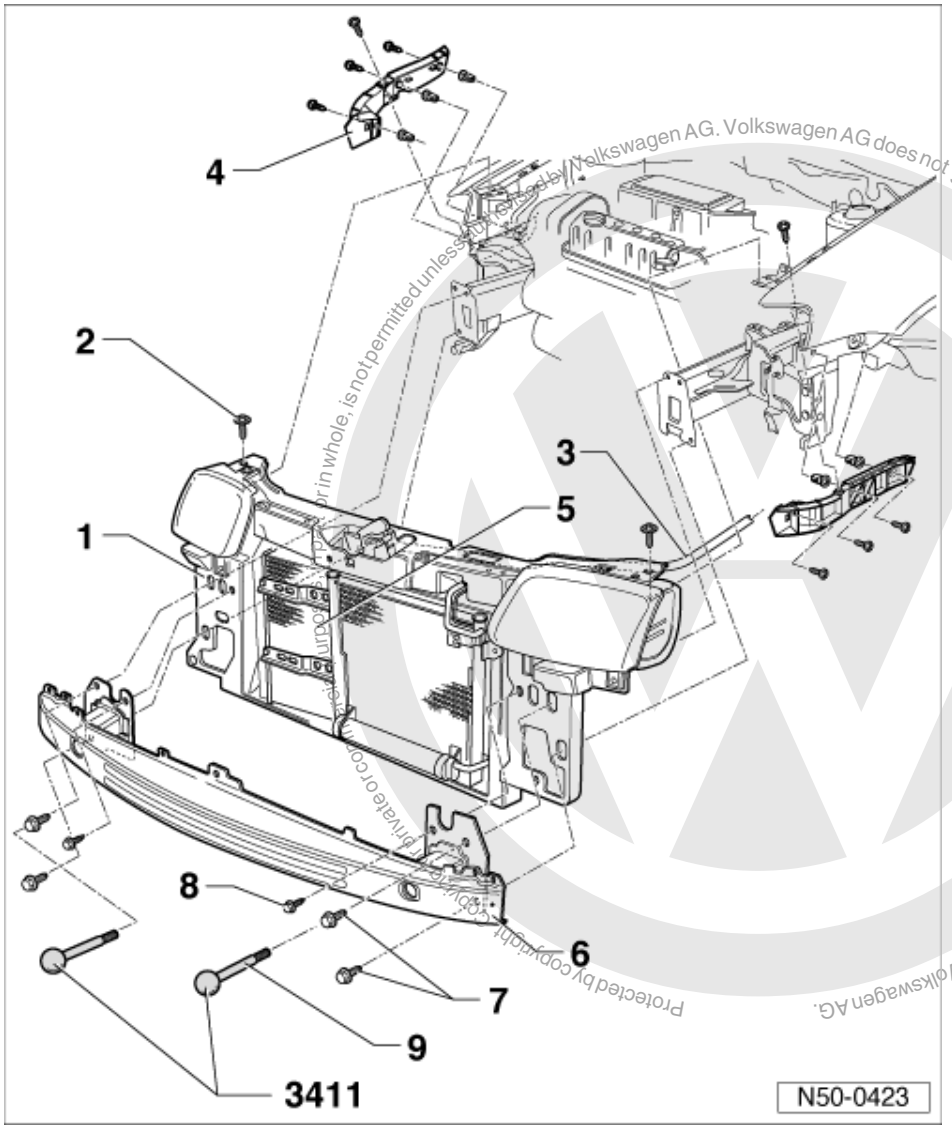

Protected by copyright. Copying for private or commercial purposes, in whole or in part, is not permitted unless authorised by Volkswagen AG. Volkswagen AG does not guarantee or accept any liability with respect to the correctness of information in this document. Copyright by Volkswagen AG.

satelettronica

1 Lock carrier with attachments
- Removing: => Page 143

2 Bolt
- Qty. 2
- 8 Nm

3 Bowden cable

4 Guide

5 Radiator and condenser

6 Bumper carrier

7 Bolt
- Qty. 4
- 23 Nm

8 Bolt
- Qty. 2
- 14 Nm

9 Special tool 3411

2.4 - Removing and installing lock carrier with attachments

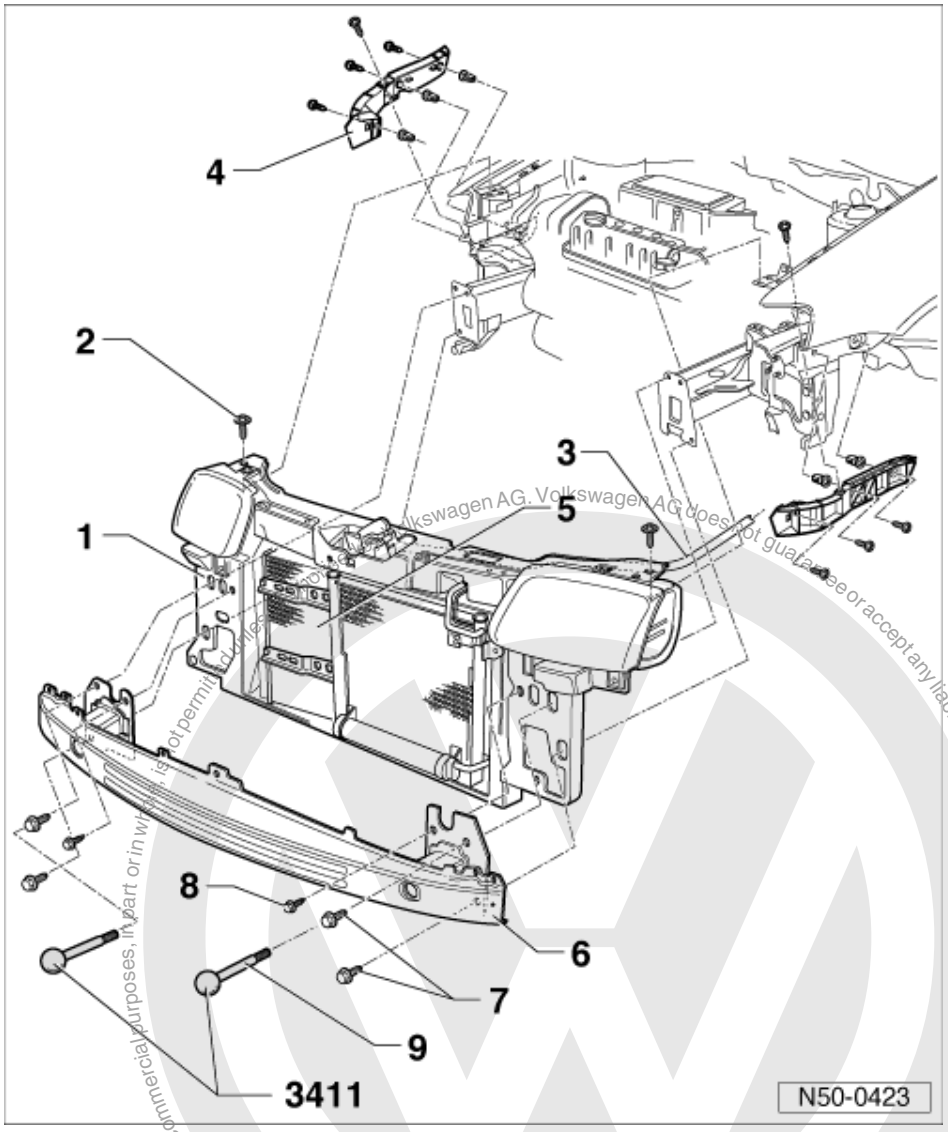

- Removing front bumper and bumper carrier => Page 137 .
- Disconnect bowden cable - 3 - on lock and disconnect electrical connections.
- Disconnect connections on headlight housing.
- Disconnect headlight washer system at T-piece (if fitted).
- Disconnect connections to charge air cooler (if fitted).
- Drain coolant and disconnect coolant hoses from radiator.

=> Repair group 19; Draining and filling coolant. Draining and filling coolant.

- The refrigerant circuit must be drained on vehicles with air conditioner.

=> Heating, air conditioning; Repair group 87.

satelettronica

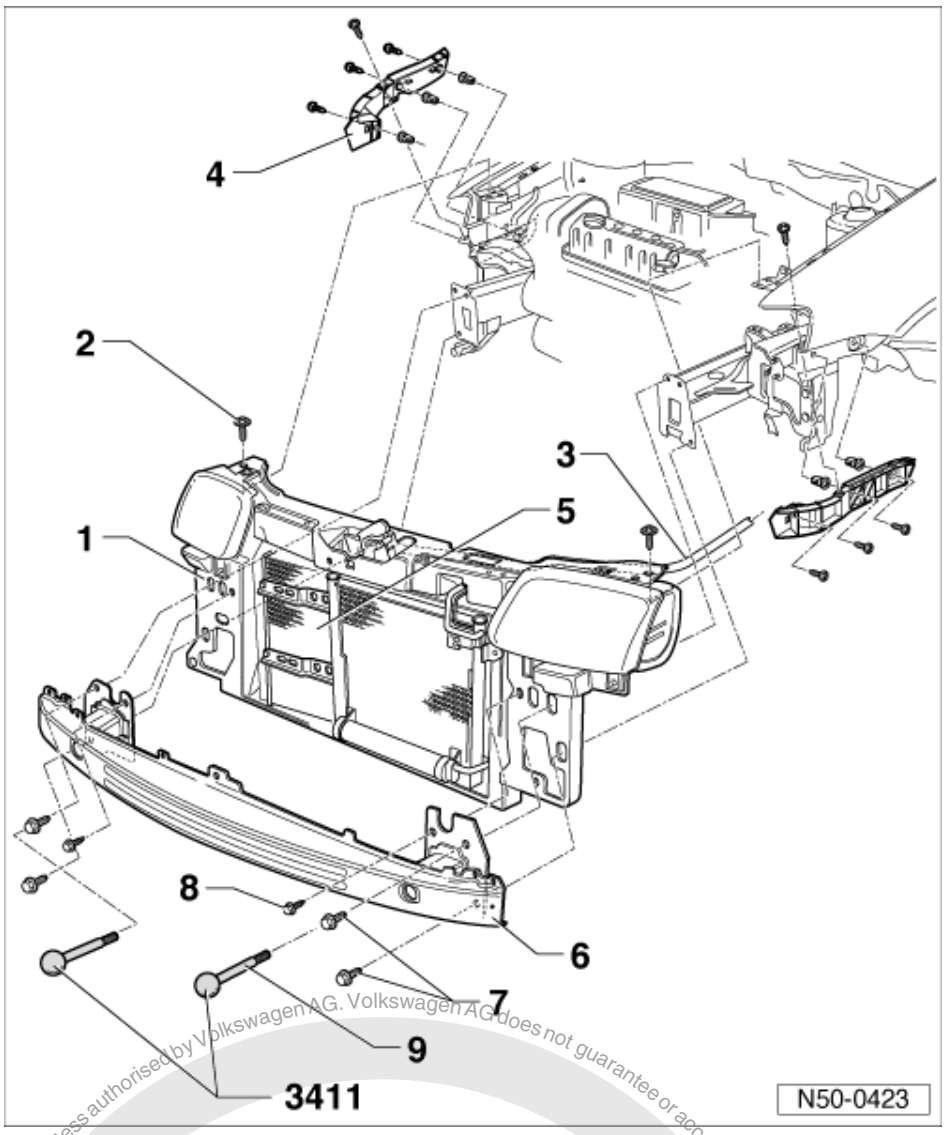

- Remove screws - 2 - and bolts - 7 - and pull off lock carrier with attachments.
- Unbolt radiator and condenser from lock carrier.

Installing

- Align lock carrier to longitudinal members and between wings.
- ◆ Gaps/shut lines

=> Body repairs; Repair group 00; Body gaps/shut lines; Body front Body gaps/shut lines Body front

satelettronica
Protected by copyright. Copying for private or commercial purposes, in part or in whole, is not permitted unless authorised by Volkswagen AG. Volkswagen AG does not guarantee or accept any liability with respect to the correctness of information in this document. Copyright by Volkswagen AG.

2.5 - Lock carrier - service position

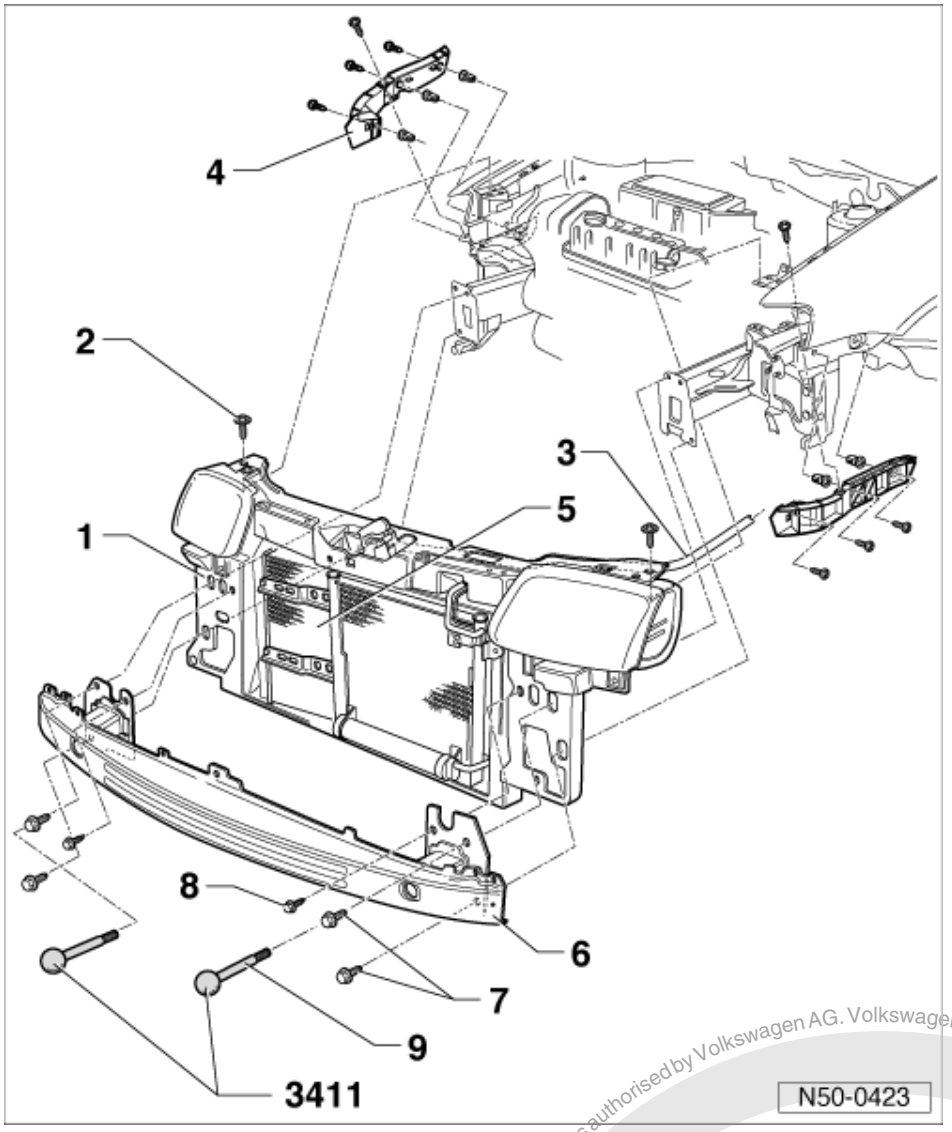

- Remove front bumper cover => Page 137
- Disconnect bowden cable on lock.
- Unscrew one bolt - 7 - on each longitudinal member and screw special tool 3411 onto right and left-hand longitudinal member.
- Unscrew bolts - 7 - and - 2 - and pull lock carrier in area of special tool 3411 forwards.

Protected by copyright. Copying for private or commercial purposes, in part or in whole, is not permitted unless authorised by Volkswagen AG. Volkswagen AG does not guarantee or accept any liability with respect to the correctness of information in this document. Copyright by Volkswagen AG.
satelettronica

2.6 - Front wing - Assembly overview

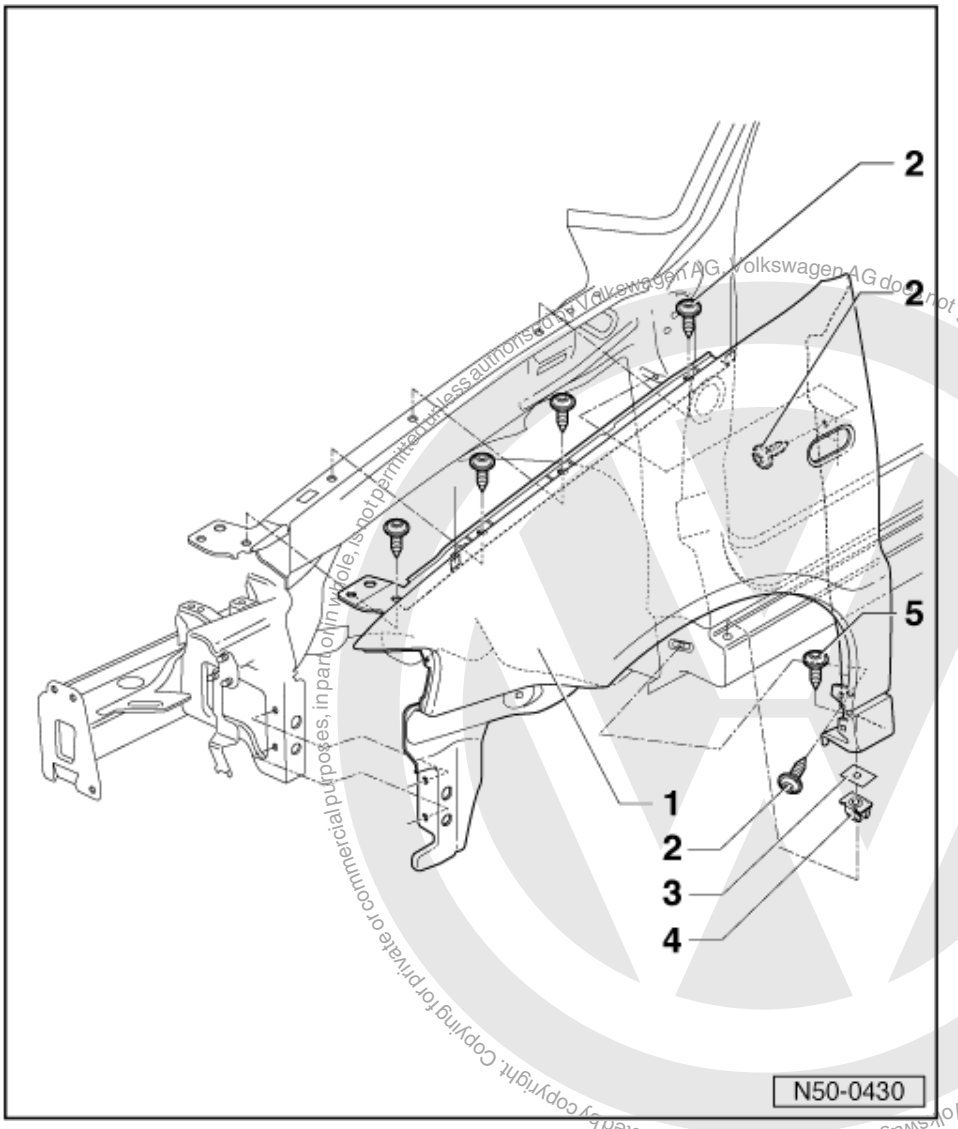

Protected by copyright. Copying for private or commercial purposes, in part or in whole, is not permitted unless authorised by Volkswagen AG. Volkswagen AG does not guarantee or accept any liability with respect to the correctness of information in this document. Copyright by Volkswagen AG.
satelettronica

1 Wing
- ◆ Removing:
- Removing front wing => Page 137 .
- Removing wheel housing liner => Page 190 .
- Heat wing in area of A pillar with a hot air blower and pull off.
- ◆ Installing:
- Before screwing on wing, fit a zinc intermediate piece AKL 381 035 50 to each bolt position contact area.

2 Bolt
- ◆ Qty. 6

3 Seal
- ◆ Only on vehicles with long side member

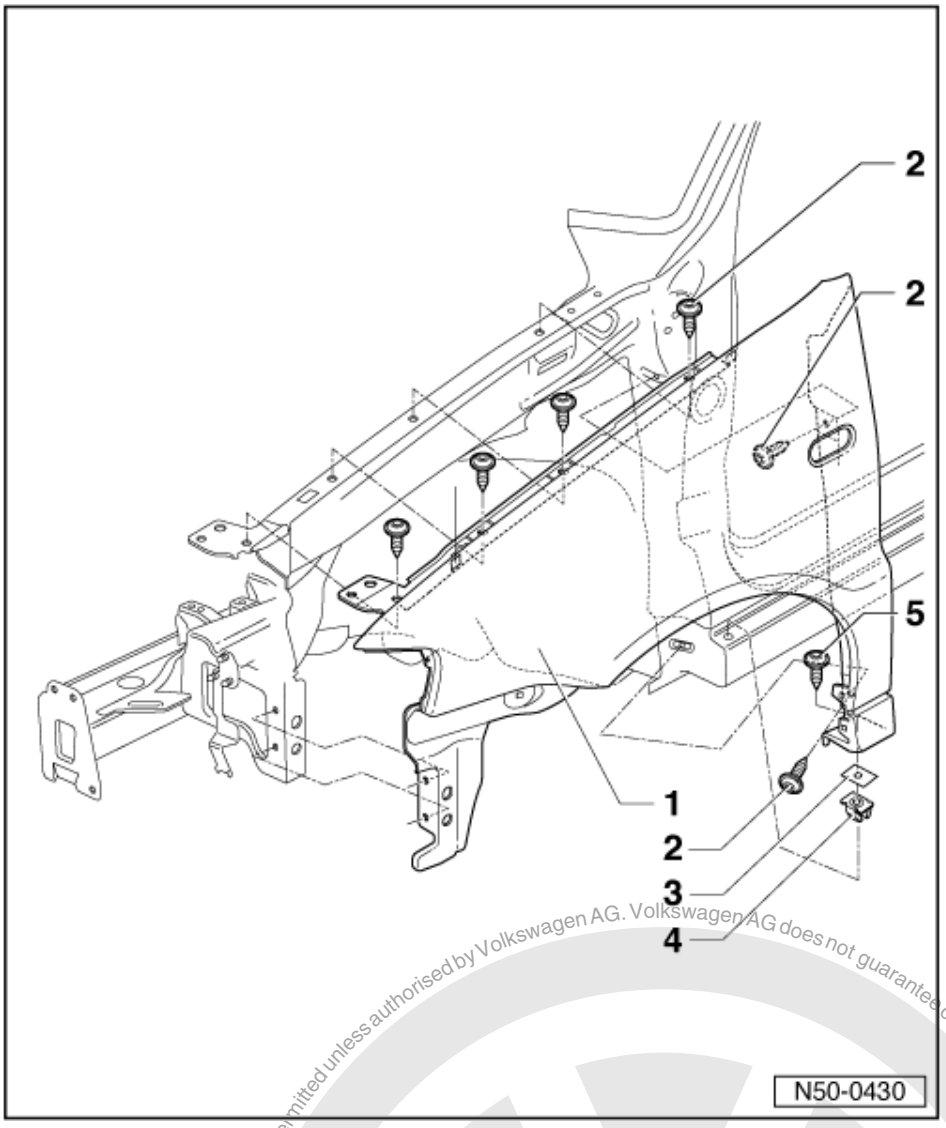

4 Spring nut
- Only on vehicles with long side member

5 Bolt
- Only on vehicles with long side member

Protected by copyright. Copying for private or commercial purposes, in part or in whole, is not permitted unless authorised by Volkswagen AG. Volkswagen AG does not guarantee or accept any liability with respect to the correctness of information in this document. Copyright by Volkswagen AG.
satelettronica

2.7 - Wing dimensions

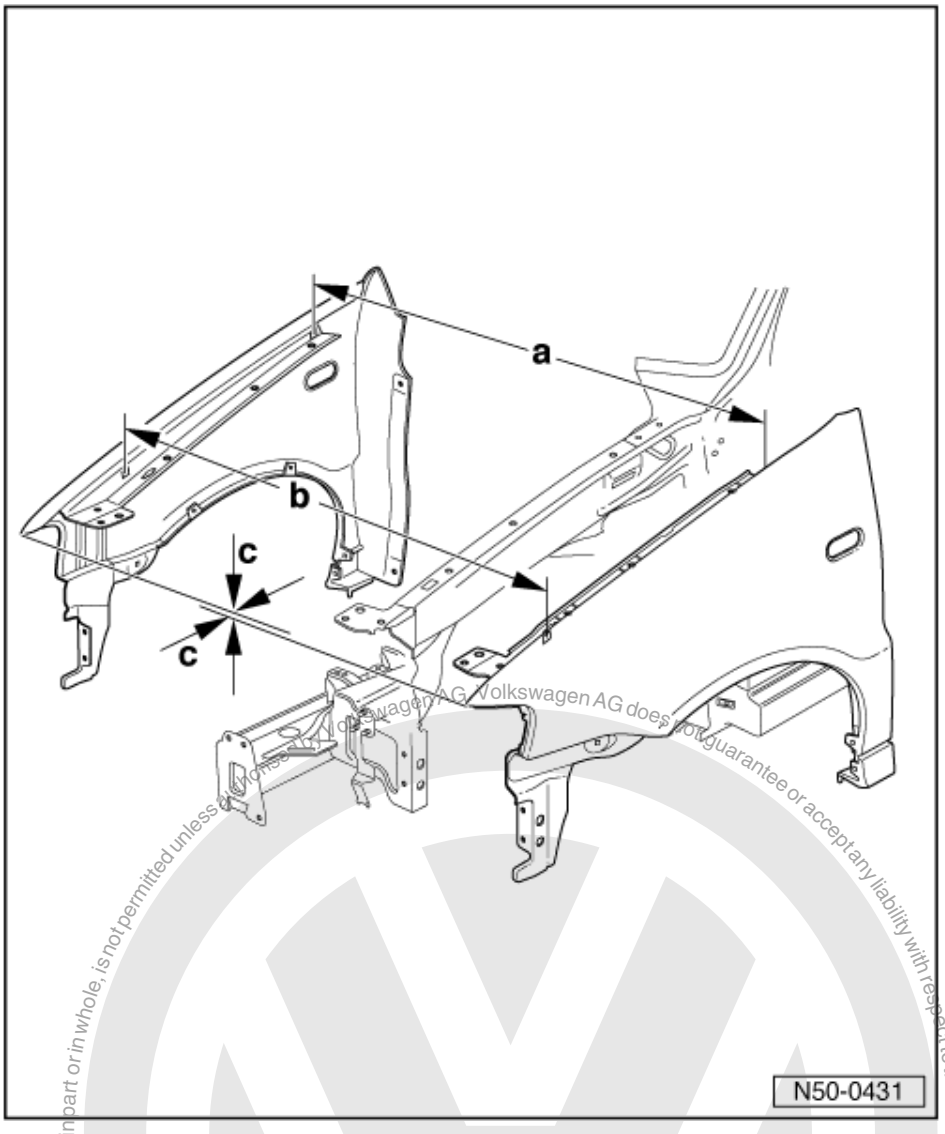

Distance between wings

Offset between wing horizontal and vertical points

a = 1349.2+1mm

b =1302.4+1 mm

c = 0.....2 mm

Protected by copyright. Copying for private or commercial purposes, in part or in whole, is not permitted unless authorised by Volkswagen AG. Volkswagen AG does not guarantee or accept any liability with respect to the correctness of information in this document. Copyright by Volkswagen AG.

satelettronica

2.8 - Noise insulation (petrol engine) - Assembly overview

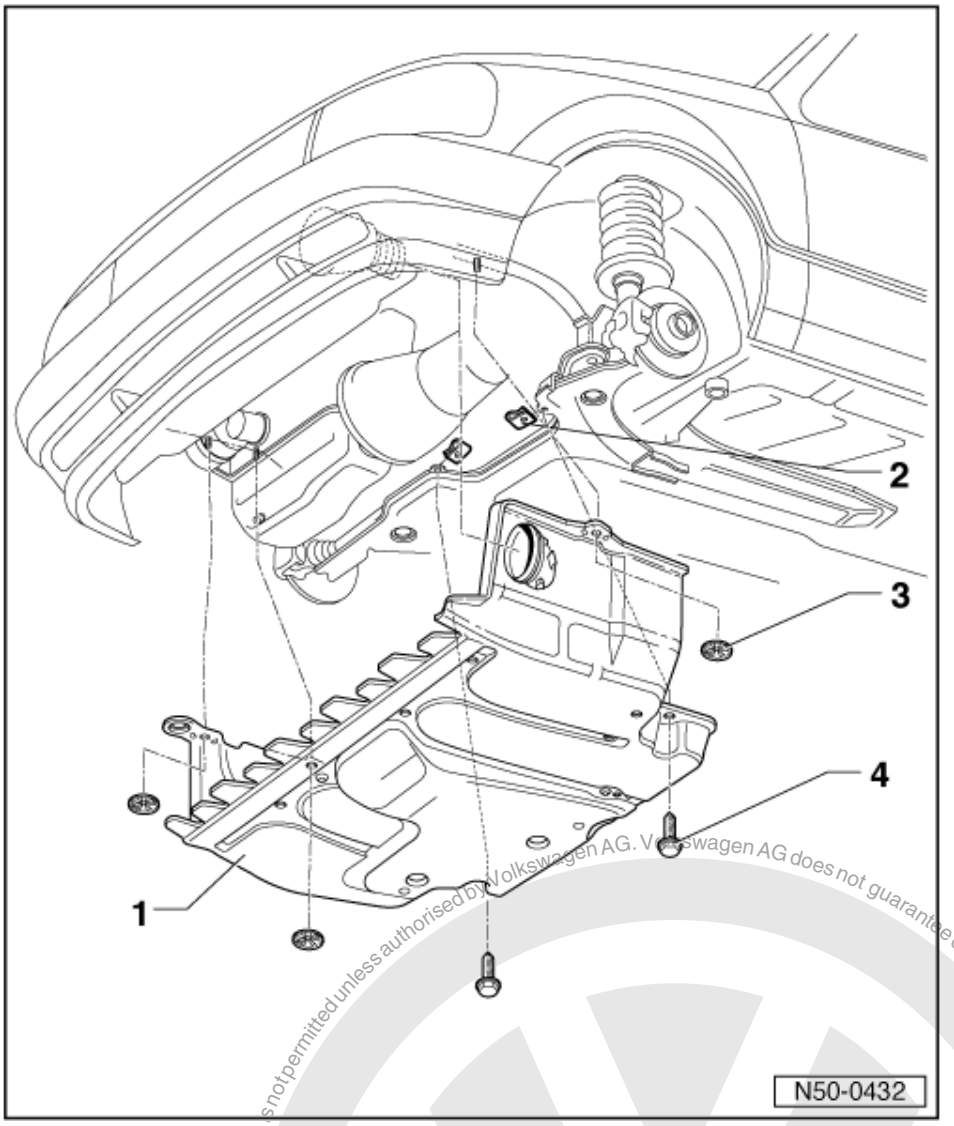

1 Noise insulation
- For petrol engines
- Bolted and inserted into lock carrier in forward area

2 Speed nut
- Qty. 2

3 Clamping washer
- Qty. 3

4 Bolt
- Qty. 2
- 6.5 Nm

Protected by copyright. Copying for private or commercial purposes, in part or whole, is not permitted unless authorised by Volkswagen AG. Volkswagen AG does not guarantee or accept any liability with respect to the correctness of information in this document. Copyright by Volkswagen AG.
satelettronica

2.9 - Noise insulation (Diesel engine) - Assembly overview

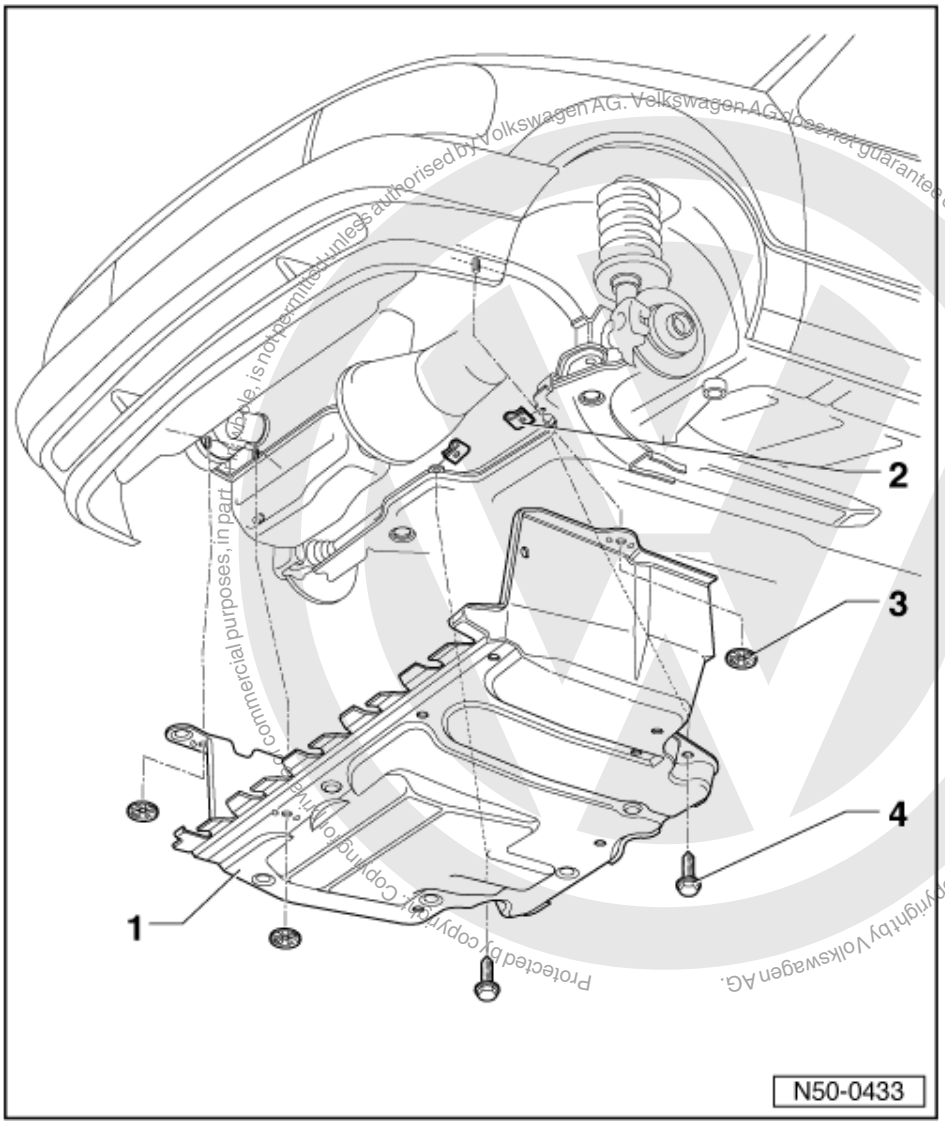

Protected by copyright. Copying for private or commercial purposes, in part or whole, is not permitted unless authorised by Volkswagen AG. Volkswagen AG does not guarantee or accept any liability with respect to the correctness of information in this document. Copyright by Volkswagen AG.

satelettronica

1 Noise insulation
- For Diesel engines
- Bolted and inserted into lock carrier in forward area

2 Speed nut
- Qty. 2

3 Clamping washer
- Qty. 3

4 Bolt
- Qty. 2
- 6.5 Nm

55 - Bonnet, Flaps

1 - Bonnet

1.1 - Bonnet

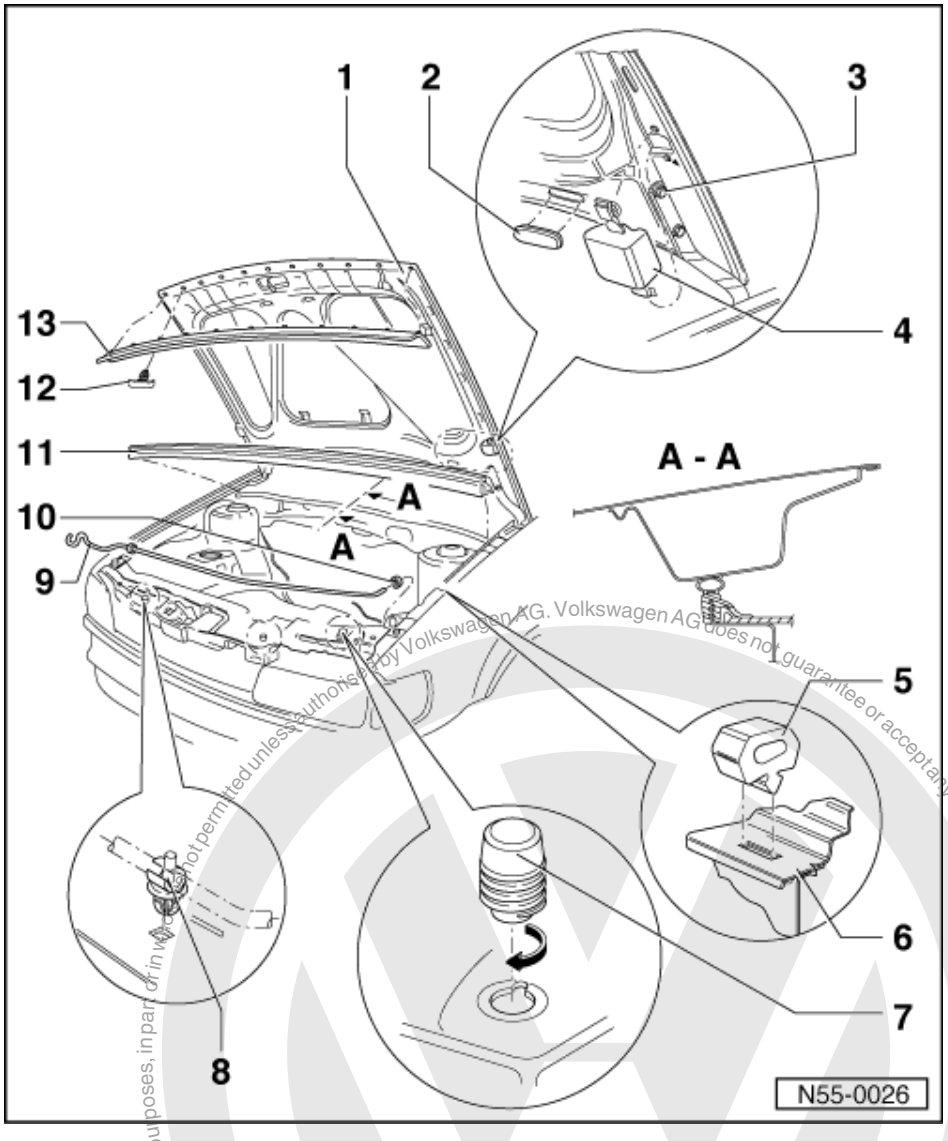

1.2 - Assembly overview

1 **Boot lid/tailgate**
- ◆ Removing
- - Remove cables/hoses for windscreen washer system and washer jets.
- - Unscrew bolts - 3 - and take off bonnet.

2 **Plug**

3 **Bolt**
- ◆ 23 Nm

4 **Filler piece**

Protected by copyright. Copying for private or commercial purposes, in part or in whole, is not permitted unless authorised by Volkswagen AG. Volkswagen AG does not guarantee or accept any liability with respect to the correctness of information in this document. Copyright by Volkswagen AG.
satelettronica

5 Guide piece
6 Wing

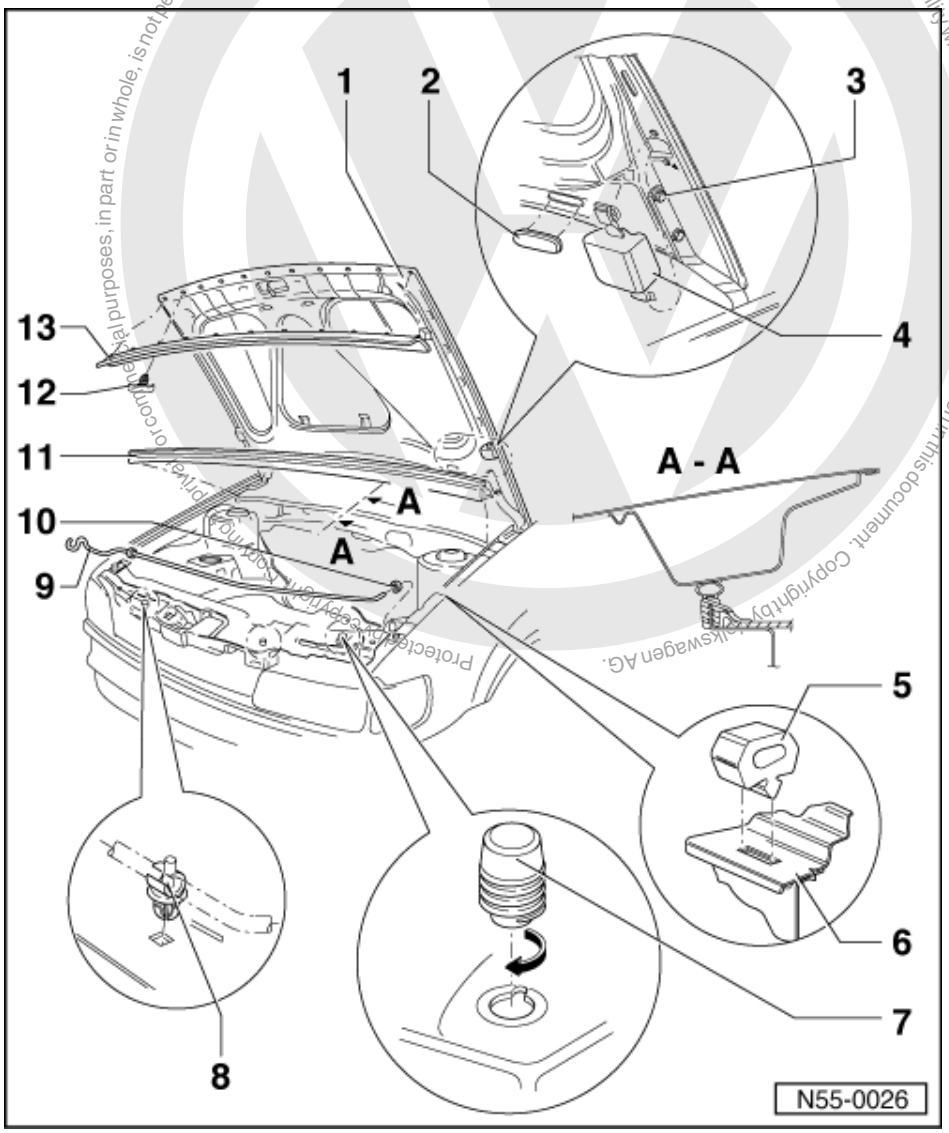

7 Adjustment buffer
- Bonnet can be adjusted for height relative to wing by screwing either in or out.

8 Clip
9 Stay
10 Bonded rubber bush
11 Plenum chamber seal
- Pushed onto flange

12 Clip
13 Cd seal

Protected by copyright. Copying for private or commercial purposes, in part or in whole, is not permitted unless authorised by Volkswagen AG. Volkswagen AG does not guarantee or accept any liability with respect to the correctness of information in this document. Copyright by Volkswagen AG.

satelettronica

1.3 - Removing and installing bonnet 10.99 >

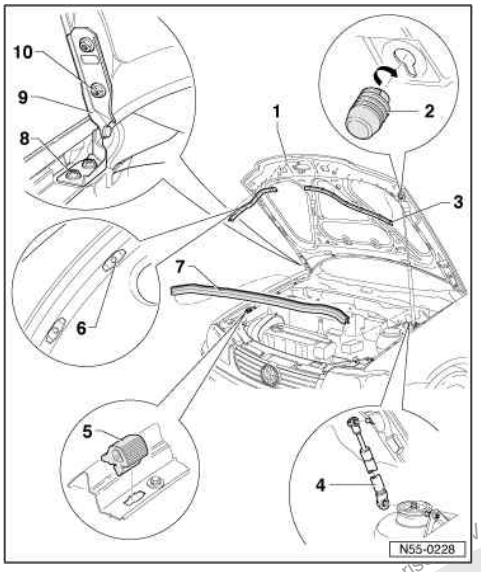

1 Bonnet
- With or without insulation, depending on equipment
- Removing
- Remove cables/hoses for washer jets.
- Disconnect gas strut - 4 - at bonnet.
- Unscrew bolts - 3 - and take off bonnet.
- Adjusting => Page 20

2 Adjustment buffer
- Bonnet can be adjusted for height relative to wing by screwing either in or out.

3 Cd seal

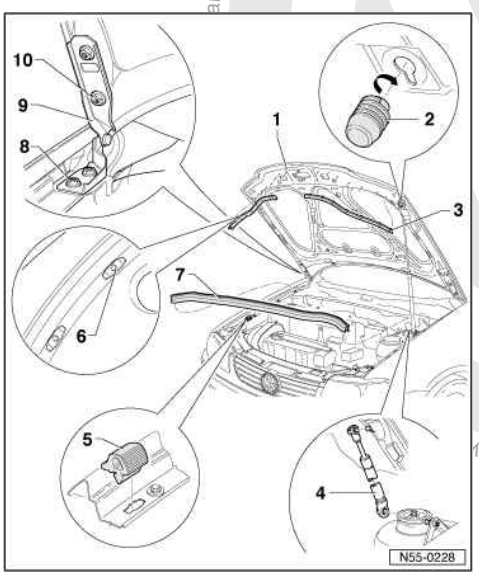

4 Gas-filled strut
- Removing and installing => Page 19
- Releasing gas => Page 20

5 Filler piece

6 Clip

7 Plenum chamber seal
- Pushed onto flange

8 Bolt
- 23 Nm

Volkswagen AG. Volkswagen AG does not guarantee or accept any liability with respect to the correctness of information in this document. Copyright by Volkswagen AG.
Protected by
satelettronica

- Loosen to adjust bonnet in longitudinal direction

9 Hinge

10 Bolt

- Loosen to adjust bonnet in transverse direction

1.4 - Removing gas strut

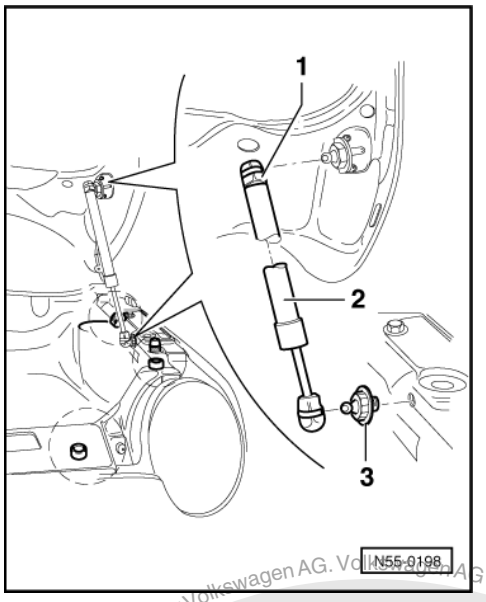

- Support boot lid/tailgate.
- -> Lift locking clip -1- with a screwdriver and pull gas-filled strut off ball-head stud -3-.

Note:

If gas strut is to be reused, retaining clip -2- must not be taken out of ball socket completely, otherwise retaining clip will be damaged.

- Locking clip
- Gas strut

3 - Combi ball stud, 22 Nm

Protected by copyright. Copying for private or commercial purposes, in part or in whole, is not permitted unless authorised by Volkswagen AG. Volkswagen AG does not guarantee or accept any liability with respect to the correctness of information in this document. Copyright by Volkswagen AG.

satelettronica

1.5 - Releasing gas from strut

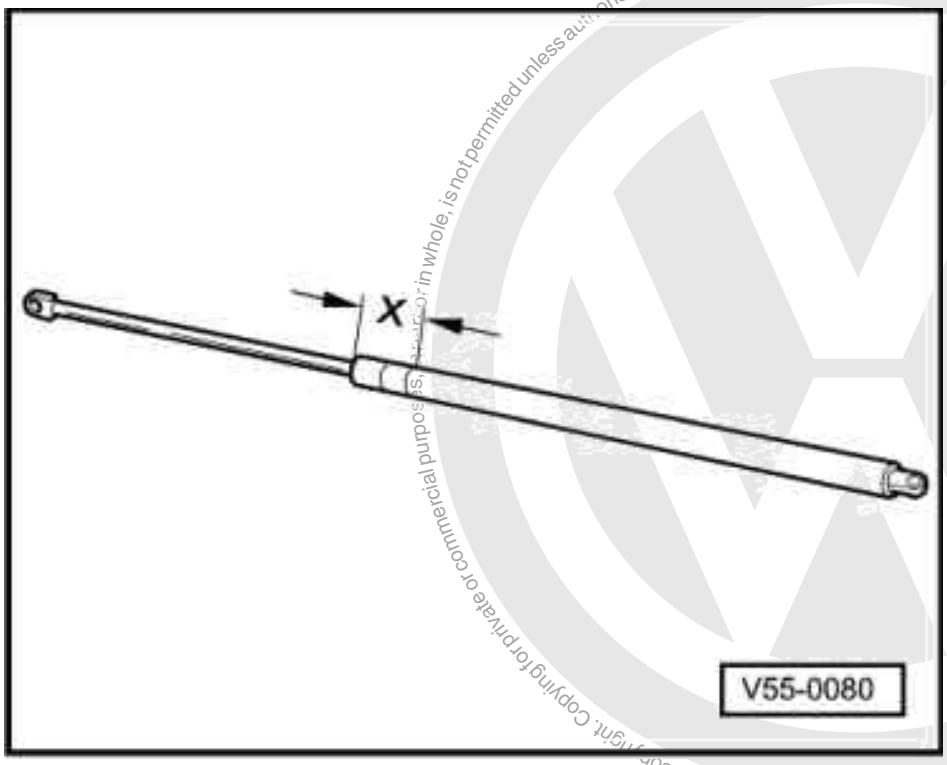

- -> Clamp gas-filled strut in vice in area x = 50 mm.

Warning! Clamping in a vice must be carried out in this area only, otherwise there is a danger of an accident.

- Saw through cylinder of gas-filled strut within first third of cylinder's overall length using piston rod end of cylinder as reference point.

Note:

- Protective goggles must be worn during sawing process.
- Cover area of saw cut with a cloth.
- Dispose of oil and cloth via existing disposal channels.

1.6 - Adjusting bonnet

- The oversized holes permit the bonnet to be aligned at the hinge.
- Using the adjustment buffers - 17 the bonnet can be adjusted for height relative the wing.
- After completing assembly or adjustments, perform corrosion protection measures to hinges and bolts.

Protected by copyright. Copying for private or commercial purposes, in part or in whole, is not permitted unless authorised by Volkswagen AG. Volkswagen AG does not guarantee or accept any liability with respect to the correctness of information in this document. Copyright by Volkswagen AG.
satelettronica

1.7 - Removing and installing bonnet lock cable

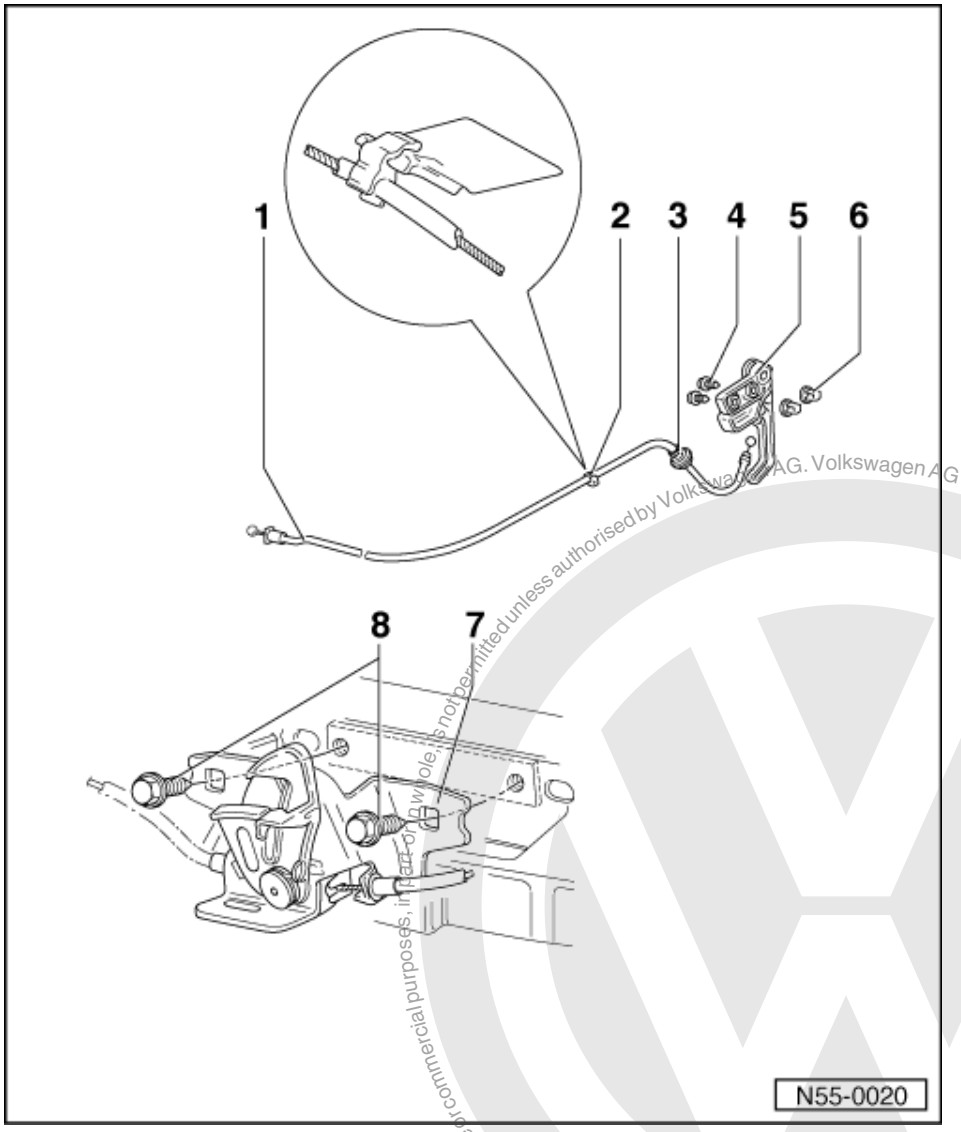

1 Cable
- ◆ Removing:
- Remove operating lever and lock, unhook cable.
- Attach approx. 1000 mm length of cord or similar to cable nipple (operating lever) and pull cable out from engine compartment.
- ◆ Installing:
- Use cord or similar as an aid when inserting.

2 Clip

3 Sealing grommet

4 Self-tapping screw

5 Release lever
- ◆ Cable attached

Protected by copyright. Copyright by Volkswagen AG.
Volkswagen AG does not guarantee or accept any liability with respect to the correctness of information in this document. Copyright by Volkswagen AG.
For private or commercial purposes, in part or in whole, is not permitted unless authorised by Volkswagen AG.
satelettronica

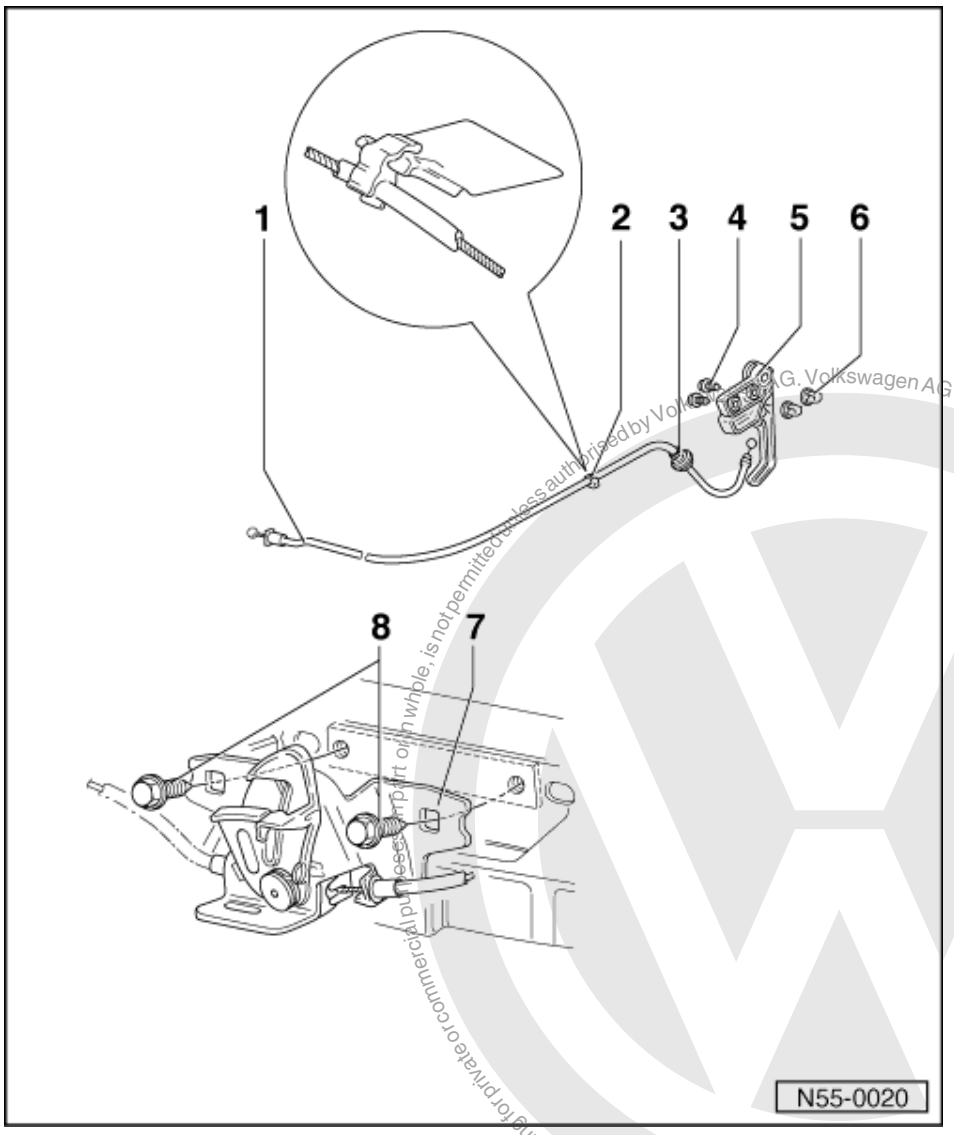

6 Spreader nut
7 Lock
- Cable attached
- Removing and installing
  => Page 23

Protected by copyright. Copying for private or commercial purposes, in part or in whole, is not permitted unless authorised by Volkswagen AG. Volkswagen AG does not guarantee or accept any liability with respect to the correctness of information in this document. Copyright by Volkswagen AG.
satelettronica

1.8 - Removing and installing bonnet lock

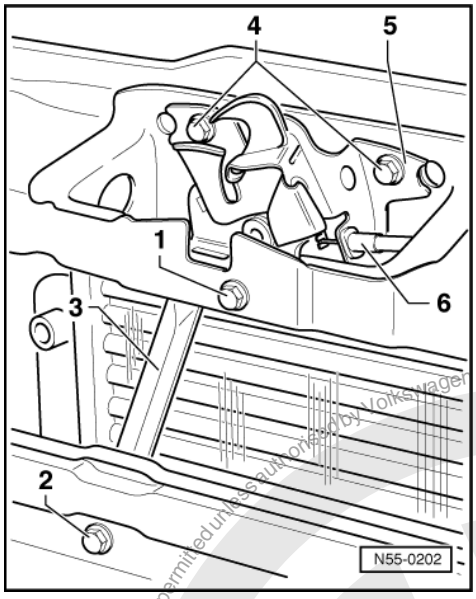

- Removing bumper => Page 137 .
- -> Remove bolts -1- and -2-.
- Take lock support -3- off lock carrier.
- Remove bolts -4-.
- Pull bonnet lock -5- forwards slightly. Unclip bowden cable -6- from lock in direction of arrow using a screw-driver.
- Disconnect micro switch from connector.

Install in reverse order.

- Adjust within oversized holes.
- Shut lines/gaps

=> Body repairs; Repair group 00; Body shut lines/gaps; Body front Body shut lines/gaps Body front

2 - Rear boot lid/tailgate

2.1 - Rear boot lid/tailgate

2.2 - Tools

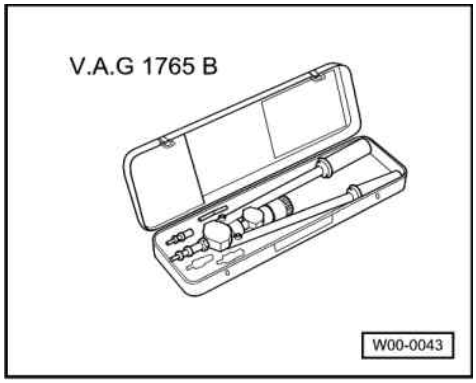

Protected by copyright. Copying for private or commercial purposes, in part or in whole, is not permitted unless authorised by Volkswagen AG. Volkswagen AG does not guarantee or accept any liability with respect to the correctness of information in this document. Copyright by Volkswagen AG.
satelettronica

Special tools, workshop equipment, testers, measuring instruments and auxiliary items required

- V.A.G 1765 B Pop-rivet tongues

2.3 - Removing gas strut

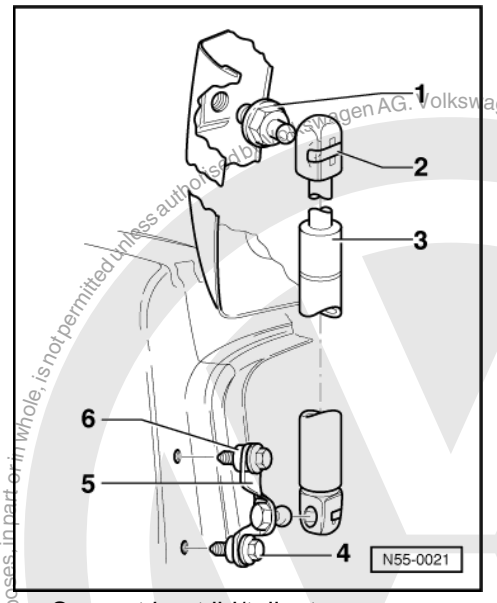

Support boot lid/tailgate.
-> Lift locking clip -2- with screwdriver and pull gas-filled strut off ball-head stud -1-.

Note:

If it is intended to re-use gas-filled strut, then do not lever out locking clip -2- completely from the ball socket otherwise clip will be damaged.

1 - Combi ball stud, 22 Nm
3 - Retaining clip
2 - Gas strut
4 - Hexagon bolt, 10 Nm
5 - Mounting bracket
6 - Sealing washer

Protected by copyright. Copying for private or commercial purposes, in part or in whole, is not permitted unless authorised by Volkswagen AG. Volkswagen AG does not guarantee or accept any liability with respect to the correctness of information in this document. Copyright by Volkswagen AG.
satelettronica

2.4 - Releasing gas from strut

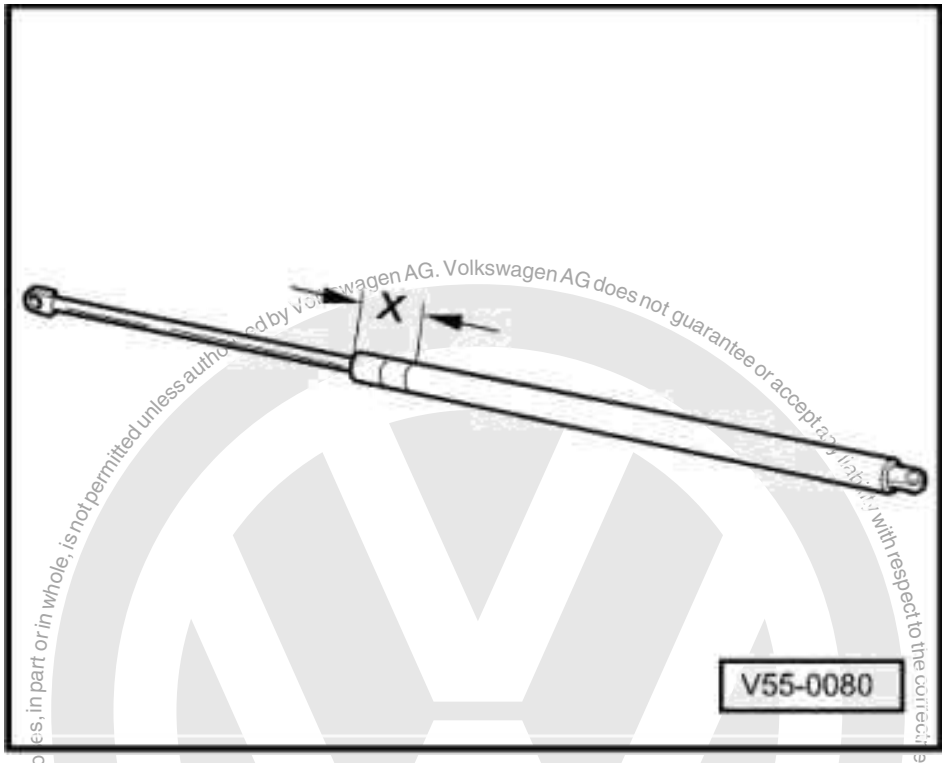

- -> Clamp gas-filled strut in vice in area x = 50 mm.

Warning! Only clamp within this area, otherwise danger of accident!

- Saw through cylinder of gas-filled strut within first third of cylinder's overall length using piston rod end of cylinder as reference point.

Note:
- Protective goggles must be worn during sawing process.
- Cover area of saw cut with a cloth.
- Dispose of oil and cloth via existing disposal channels.

2.5 - Adjusting boot lid/tailgate

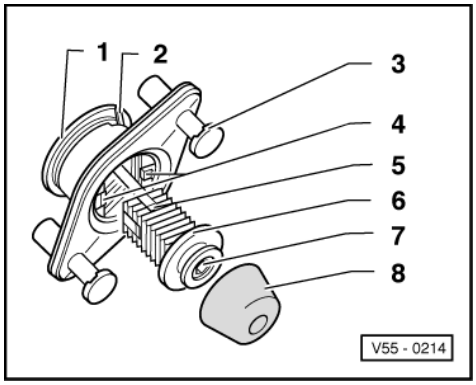

1 - -> Threaded sleeve (with left-hand thread)
2 - Spacer web
3 - Spreader pins with dismantling slot
4 - Detent lugs for basic setting

Protected by copyright. Copyright by Volkswagen AG.
Volkswagen AG does not guarantee or accept any liability with respect to the correctness of information in this document. Copyright by Volkswagen AG.
satelettronica

5 - Recess for detent lugs
6 - Detent slide
7 - Clamping screw
8 - Rubber buffer

- Lever out spreader pin, using a narrow screwdriver inserted into dismantling slot and take adjusting buffer out of boot lid/tailgate.

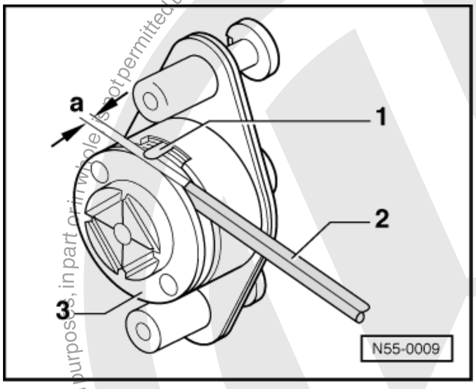

- Take off rubber buffer and unscrew clamping screw (hexagon socket 3 mm) up to the edge of the detent slot.
- -> Adjust threaded sleeve -3- (left-hand thread) to a clearance of a = 3 mm. Check clearance, e.g. with hexagon key -2-. Reinstall rubber buffer.

Note:

When new, the adjusting stop should be set to a clearance of 3 mm. The spacer web -1- rests against the threaded sleeve -3-.

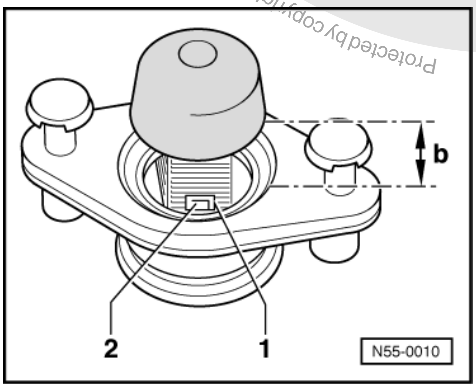

- -> Pull out detent slide and press in again far enough until locking lugs -2- engage in the recess -1-.

Clearance between housing and rubber buffer: b = 10 mm.

- Insert adjusting stop, press in spreader pins.
- Close tailgate to lock second detent.
- Open tailgate again.

Protected by copyright. Copying for private or commercial purposes, in part or in whole, is not permitted unless authorised by Volkswagen AG. Volkswagen AG does not guarantee or accept any liability with respect to the correctness of information in this document. Copyright by Volkswagen AG.

satelettronica

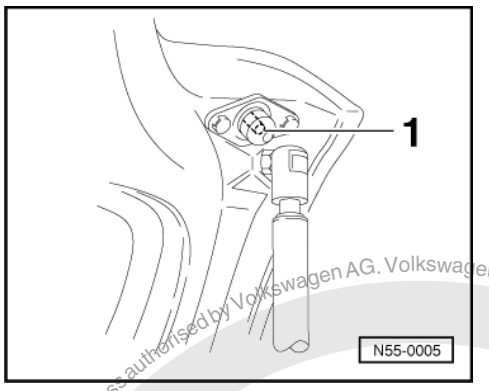

- -> Tighten clamping screw -1- to 2 Nm (torque screwdriver V.A.G 1624).

2.6 - Removing and installing tailgate/boot lid lock

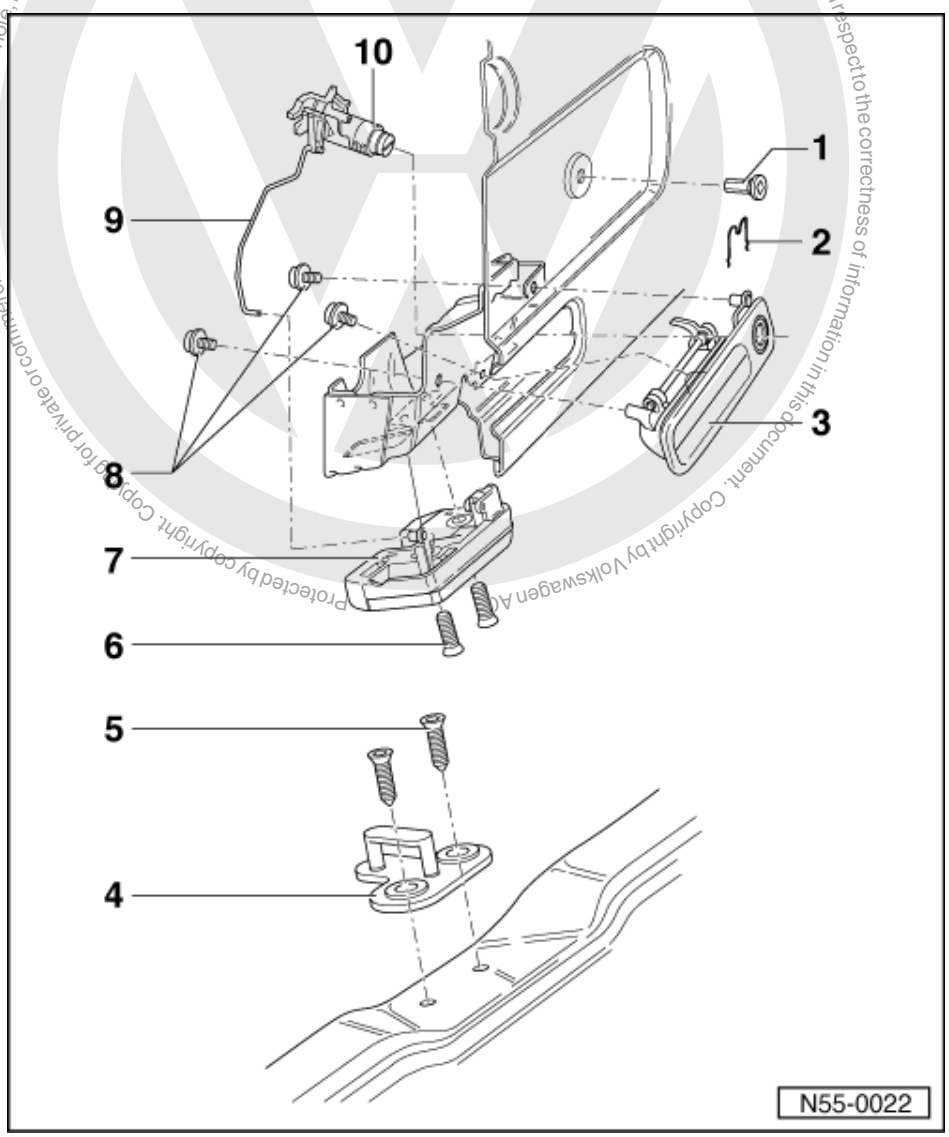

1 Blind rivet nut
- Insert with pop-rivet tongues V.A.G 1765 B
- Changed gradually in series production from 5 mm to 6 mm thread

2 Securing clip

3 Handle

Protected by copyright. Copying for private or commercial purposes, in part or in whole, is not permitted unless authorised by Volkswagen AG. Volkswagen AG does not guarantee or accept any liability with respect to the correctness of information in this document. Copyright by Volkswagen AG.
satelettronica

Protected under copyright. Copying for private or commercial purposes, in part or in whole, is not permitted unless authorised by Volkswagen AG. Volkswagen AG does not guarantee or accept any liability with respect to the correctness of information in this document. Copyright by Volkswagen AG.

- ◆ Removing
- Unclip boot lid/tailgate trim (handle is secured with one cross-head screw)
- Unclip pull rod - 9 -, lever out securing clip - 2 - and take lock cylinder out of grip - 3 -.
- Separate luggage compartment lighting connector and if necessary unclip central locking operating rod.
- Remove screws - 8 - and take handle from rear lid.

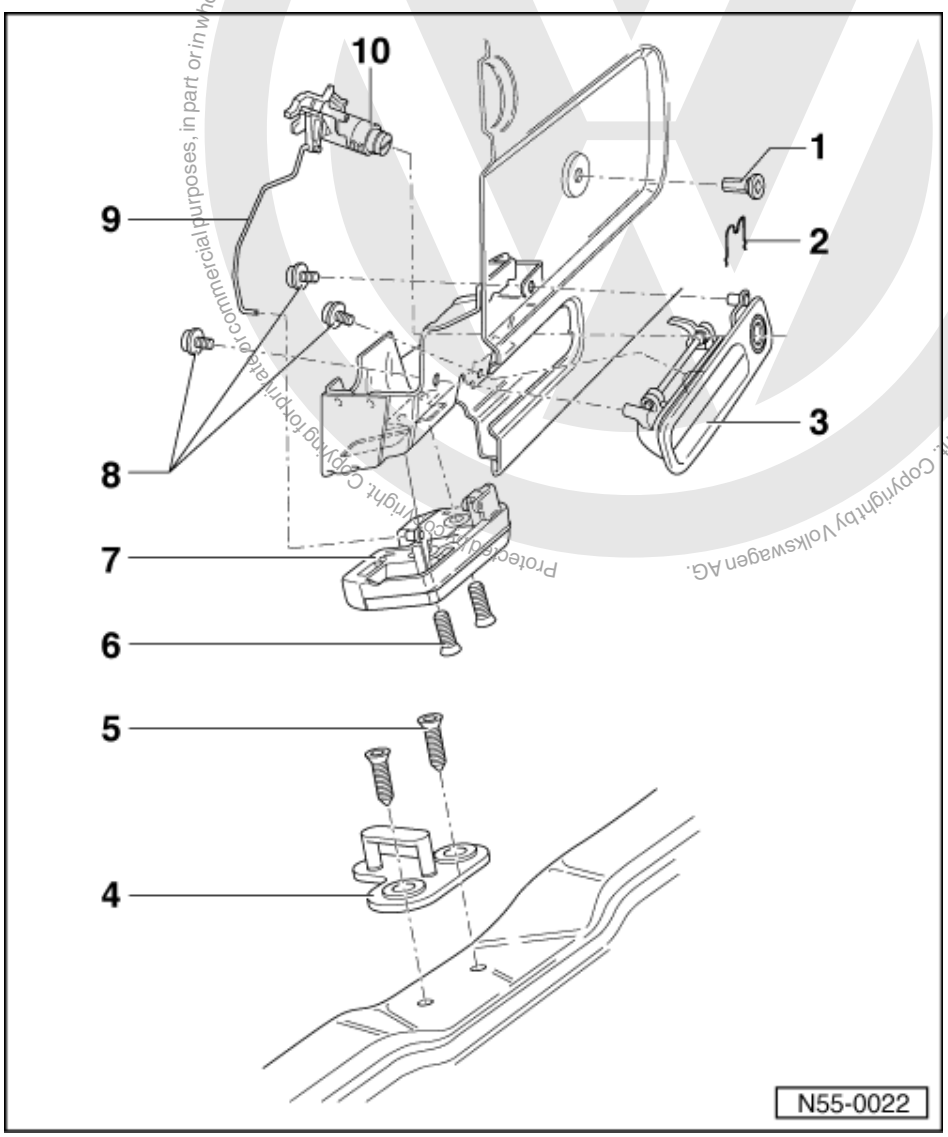

4 Locking plate

5 Countersunk screw
- ◆ 20 Nm

6 Countersunk screw
- ◆ 20 Nm

7 Lock
- ◆ Installing - only with striker catch in detent

8 Screw
- ◆ 4 Nm

9 Pull rod

10 Lock cylinder housing
- ◆ Removing
- Unclip boot lid/tailgate trim (hand grip is secured with one cross-head screw).
- Unclip pull rod - 9 -, lever out securing clip - 2 - and take lock cylinder out of grip - 3 -.

satelettronica

2.7 - Removing and installing lock cylinder

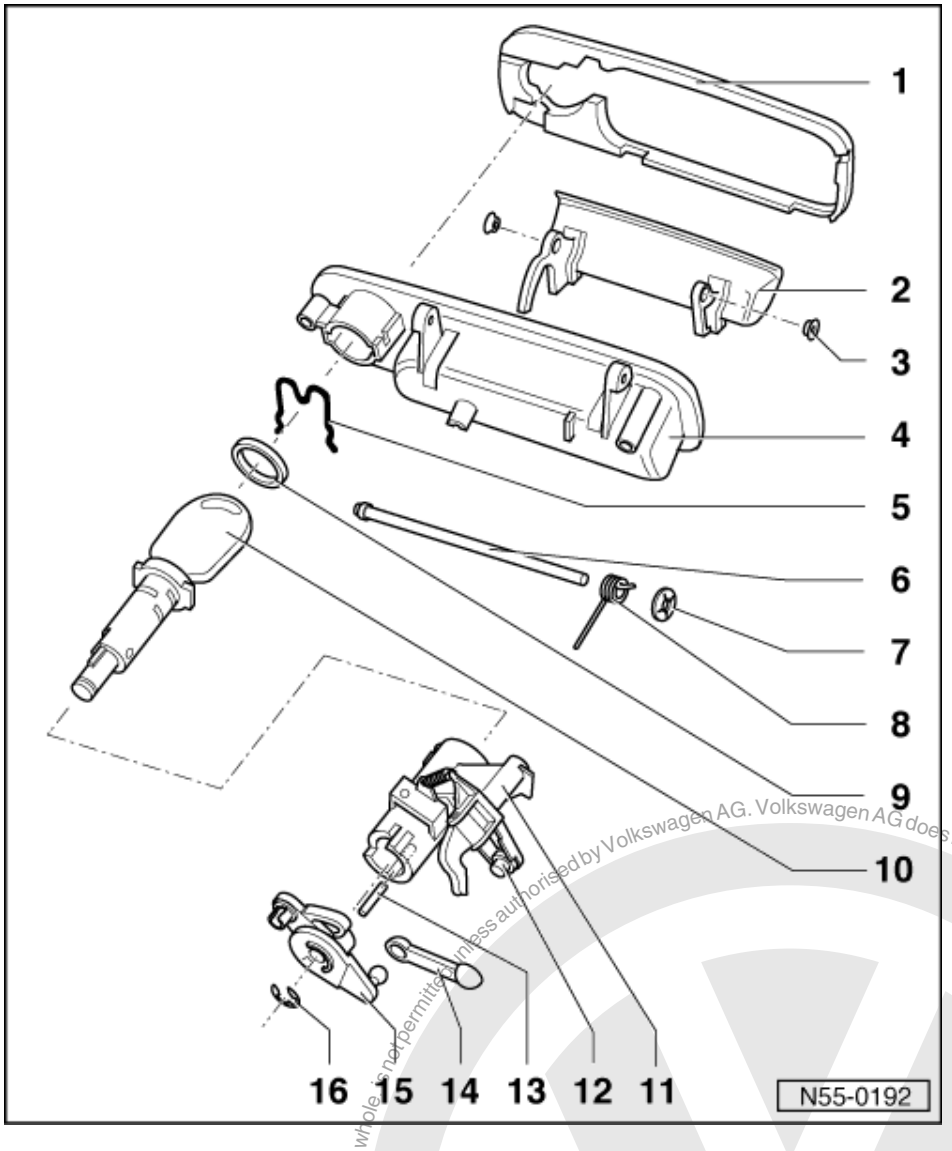

Notes:

- When changing the lock cylinder, be careful that the actuating pin - 13 - does not get lost. If the pin is missing, central locking will not function.
- For vehicles from model year '98, the lock cylinders cannot be replaced individually.

1 Seal
2 Handle
3 Guide sleeves
4 Grip recess
5 Securing clip
6 Pin

Protected by copyright. Copying for private or commercial purposes, in part or in whole, is not permitted unless authorised by Volkswagen AG. Volkswagen AG does not guarantee or accept any liability with respect to the correctness of information in this document. Copyright by Volkswagen AG.
satelettronica

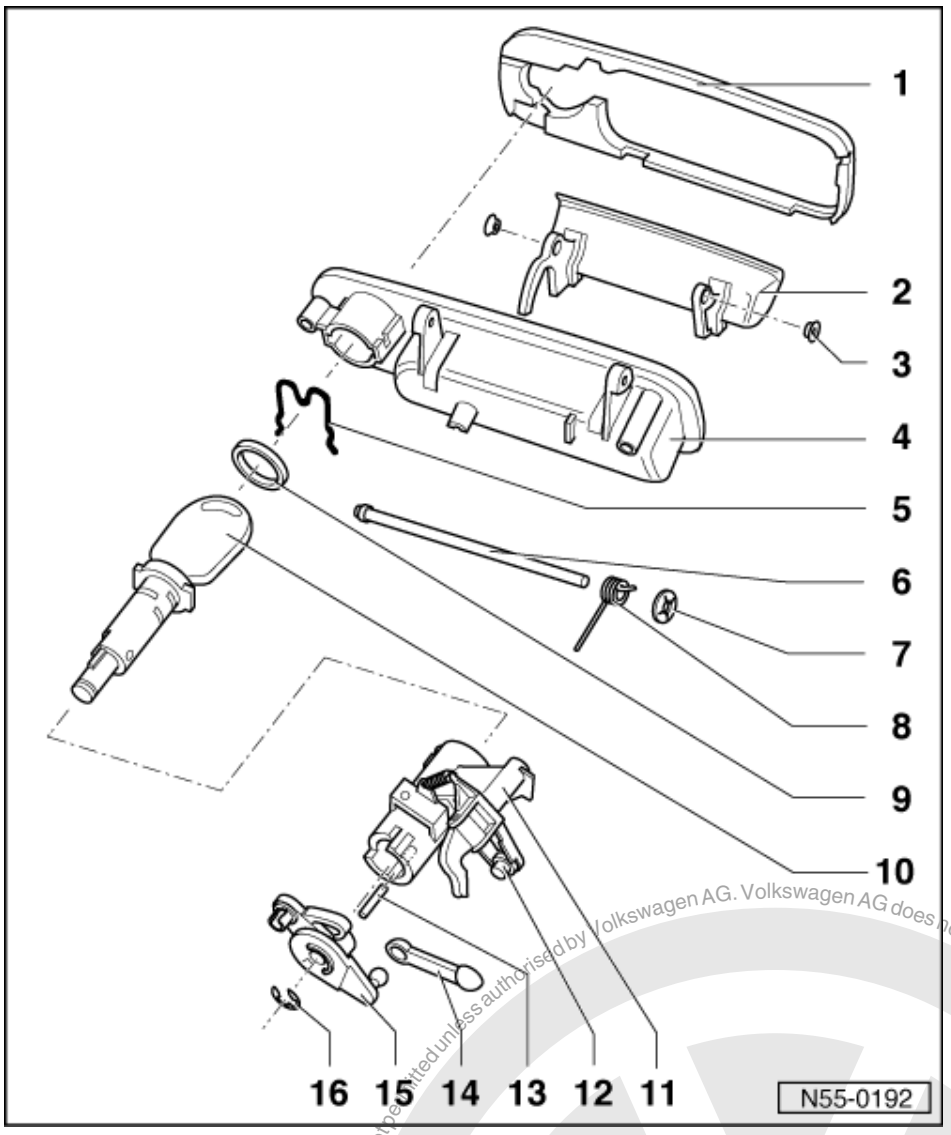

7 Circlip

8 Spring

9 Seal

10 Lock cylinder

- Removing
- Unclip boot lid/tailgate trim (hand grip is secured with one cross-head screw).
- Unclip pull rod (and if necessary central locking operating rod), lever out securing clip - 5 - and take lock cylinder housing out of grip housing - 4 -.
- Press off circlip - 16 - and pull out lock cylinder (key must be inserted in lock cylinder).
- Maintaining common key locking
  => Page 32

Protected by copyright. Copying for private or commercial purposes, in part or in whole, is not permitted unless authorised by Volkswagen AG. Volkswagen AG does not guarantee or accept any liability with respect to the correctness of information in this document. Copyright by Volkswagen AG.
satelettronica

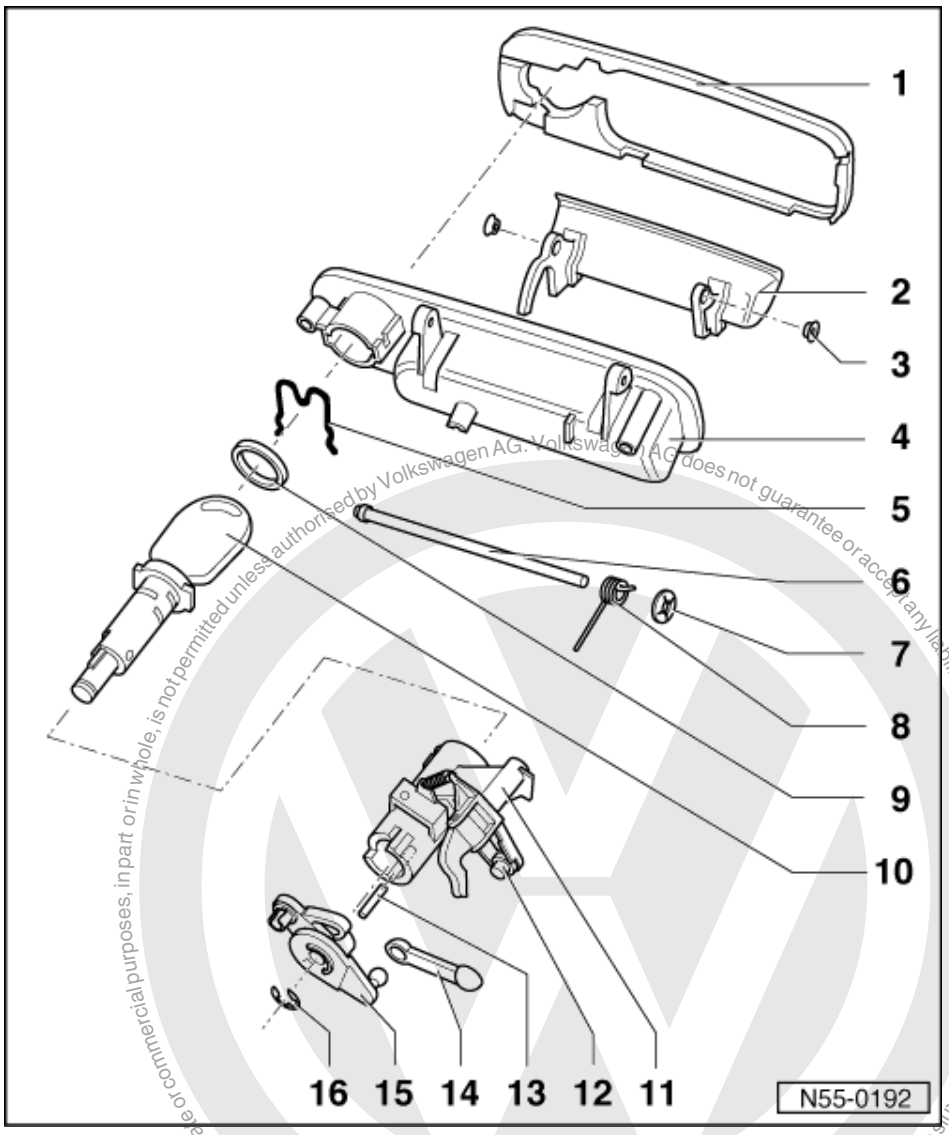

11 Lock cylinder housing
12 Rod clip
13 Actuating pin
14 Connecting rod
15 Relay lever
16 Retaining clip

Protected by copyright. Copying for private or commercial purposes, in part or in whole, is not permitted unless authorised by Volkswagen AG. Volkswagen AG does not guarantee or accept any liability with respect to the correctness of information in this document. Copyright by Volkswagen AG.
satelettronica

2.8 - Maintaining common key locking

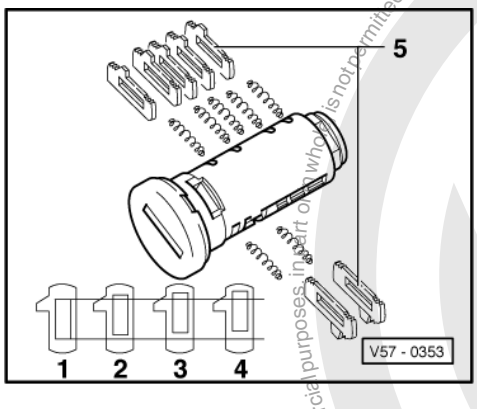

-> Common key locking can be maintained as it is in the vehicle by repositioning or attaching locking plates -5-.

1, 2, 3, and 4 - possible locking plate sizes.

Refer to Special Information Body No. 18, dated 06.89, for additional information.

3 - Tank flap unit

3.1 - Tank flap unit

3.2 - Tools

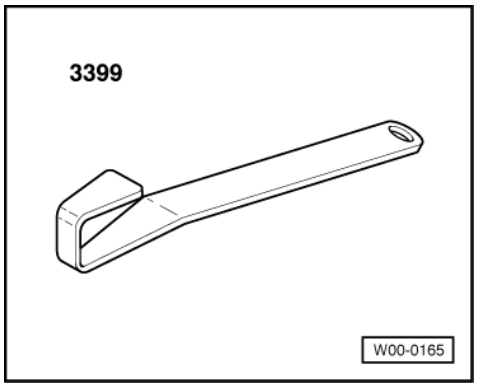

Special tools, workshop equipment, testers, measuring instruments and auxiliary items required

- 3399 Fitting tool

Protected by copyright. Copying for private or commercial purposes, in part or in whole, is not permitted unless authorised by Volkswagen AG. Volkswagen AG does not guarantee or accept any liability with respect to the correctness of information in this document. Copyright by Volkswagen AG.
satelettronica

3.3 - Assembly overview

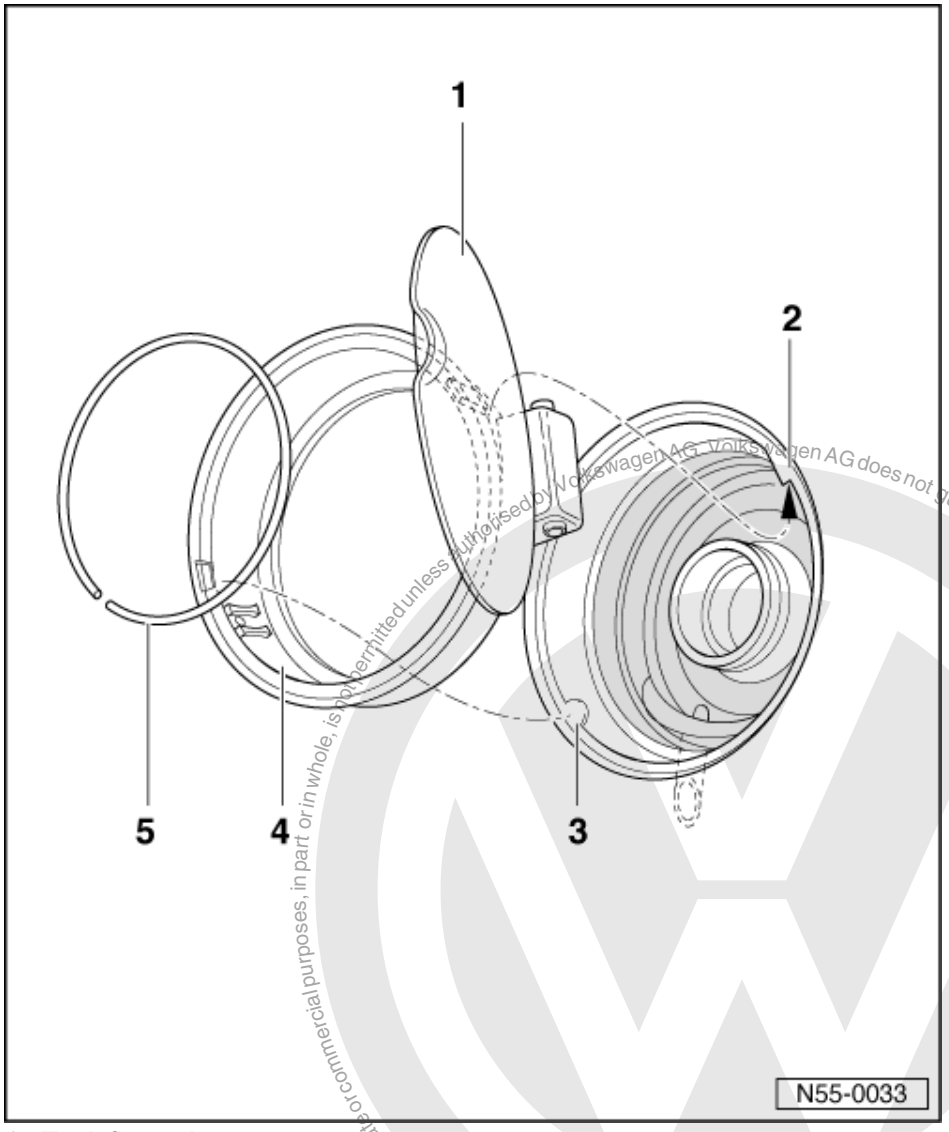

1 Tank flap unit
- Removing and installing => Page 34
- Dismantling and assembling =>Page 36

2 Stop

3 Lug

4 Tank flap cup
- Removing and installing
  (can only be removed as part of tank flap unit)=> Page 34

5 Ring

Protected by copyright. Copyright by Volkswagen AG.
Copyright by Volkswagen AG. Volkswagen AG does not guarantee or accept any liability with respect to the correctness of information in this document.
Reproduction, in whole or in part, is not permitted unless authorised by Volkswagen AG for commercial purposes, in part or in whole, is not permitted unless authorised by Volkswagen AG for private or commercial purposes.
satelettronica

3.4 - Removing and installing tank flap unit

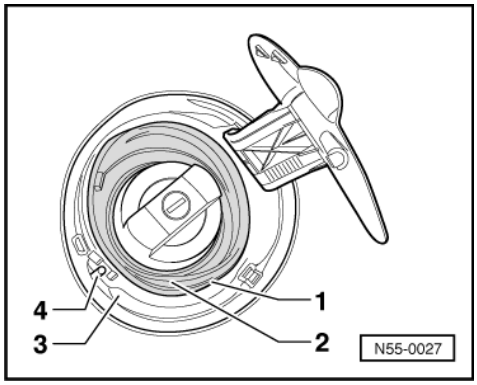

Removing

Note:

-> The tank flap positioning element -4- (locking rod is illustrated) must be removed on vehicles with central locking =>Page 57-25.

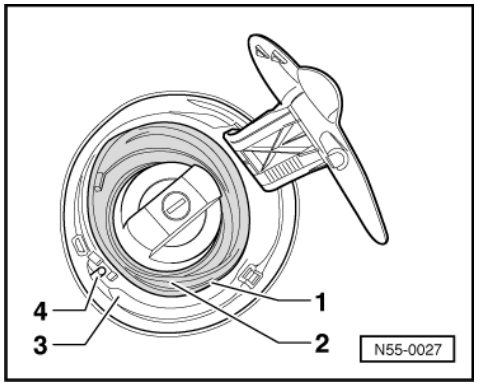

- -> Remove filler cap.
- Pull ring -1- (behind the sealing lip) out of rubber cup -2-.
- Press rubber cup -2- off the tank flap unit -3- towards centre of vehicle.

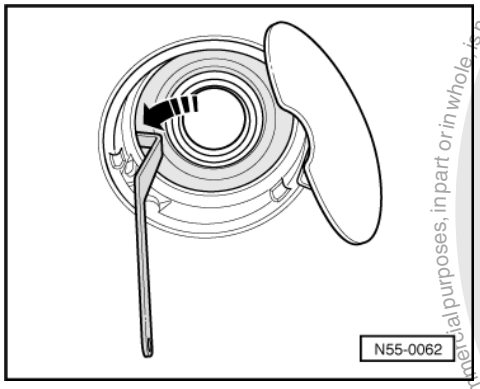

- -> Insert the lever 3399 on the left on the filler neck behind the tank flap unit -arrow-.

Protected by copyright. Copying for private or commercial purposes, in part or in whole, is not permitted unless authorised by Volkswagen AG. Volkswagen AG does not guarantee or accept any liability with respect to the correctness of information in this document. Copyright by Volkswagen AG.
satelettronica

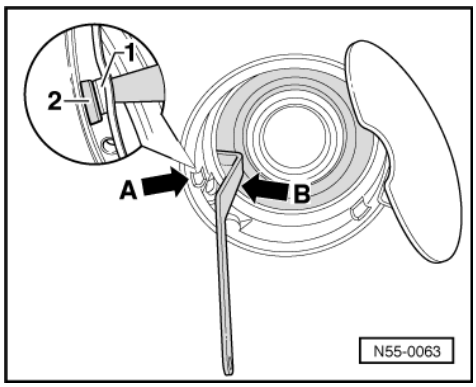

- -> Then align the lever above the left recess -arrow A-.
- Now push the retaining lug -1- carefully towards the tank flap unit with the lever -2-.
- To do this support lever -2- on the offset -arrow B- with the right hand, and press from rear to centre with the other hand.
- Pull tank flap unit forward slightly releasing the catch.

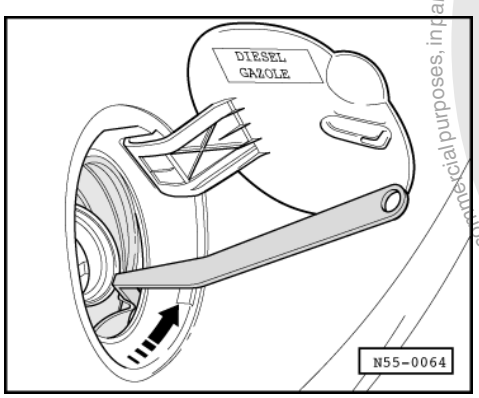

- -> Then move the lever -1- to the 2nd recess -arrow-.
- Now press the retaining lug carefully.
- Pull tank flap unit forward slightly releasing the catch.
- Remove tank flap unit.

Installing

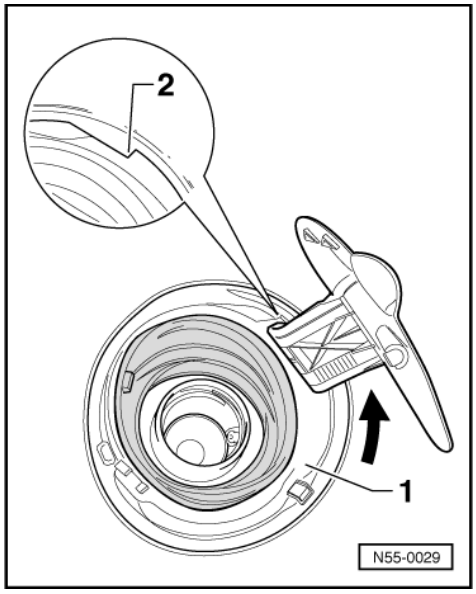

- -> Insert tank flap unit -1- and turn in direction of arrow onto stop -2-.
- Then fit rubber cup and ring. Screw on filler cap.

Protected by copyright. Copying for private or commercial purposes, in part or in whole, is not permitted unless authorised by Volkswagen AG. Volkswagen AG does not guarantee or accept any liability with respect to the correctness of information in this document. Copyright by Volkswagen AG.
satelettronica

3.5 - Dismantling and assembling tank flap unit

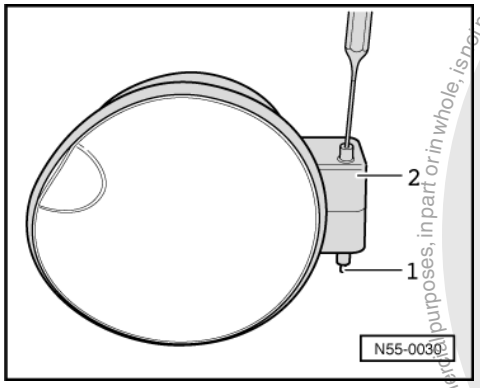

Dismantling

- -> Push pin -1- out of tank flap unit -2- with a punch .
- Remove tank flap from tank flap unit.

Assembling

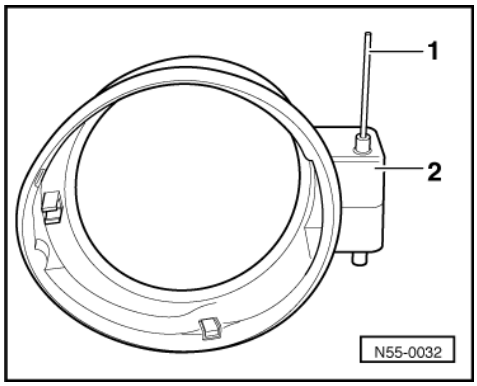

- -> Pre-fit pin -1- in the tank flap sleeve -2-.

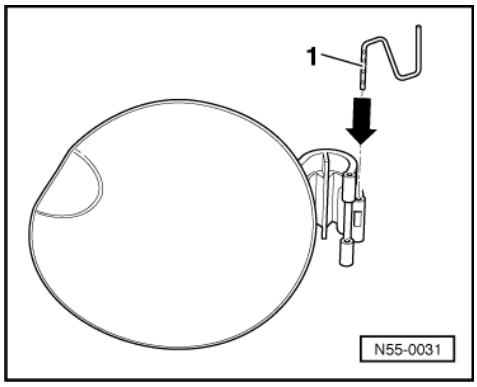

- -> Hook spring -1- in tank flap.

Protected by copyright. Copying for private or commercial purposes, in part or in whole, is not permitted unless authorised by Volkswagen AG. Volkswagen AG does not guarantee or accept any liability with respect to the correctness of information in this document. Copyright by Volkswagen AG.
satelettronica

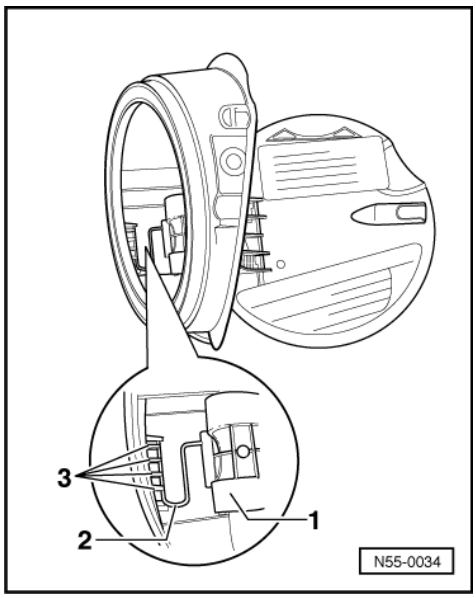

- -> Insert tank flap -1- into tank flap sleeve with the spring -2- behind the locating lugs -3-.
- Close tank flap and push pin in.
- Check function of tank flap.
- Installing tank flap unit => Page 35 .
- Install positioning element.

satelettronica

Protected by copyright. Copying for private or commercial purposes, in part or in whole, is not permitted unless authorised by Volkswagen AG. Volkswagen AG does not guarantee or accept any liability with respect to the correctness of information in this document. Copyright by Volkswagen AG.

57 - Front doors/Door components/Central locking system

1 - Doors front

1.1 - Doors front

1.2 - Tools

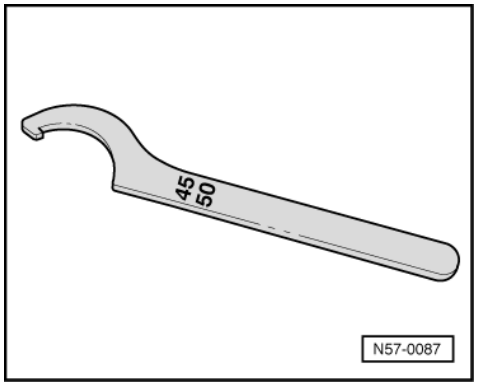

Special tools, workshop equipment, testers, measuring instruments and auxiliary items required

- Commercially available 'C' spanner with lug DIN 1810/A, size 45/50 mm

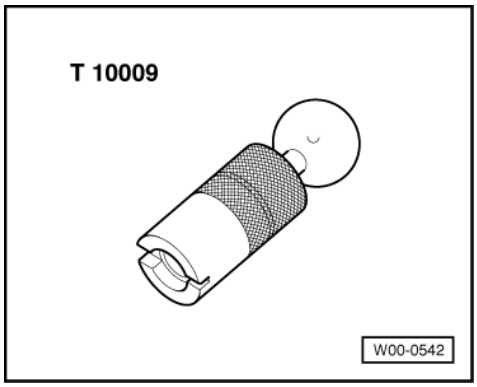

- T10009 Fitting tool

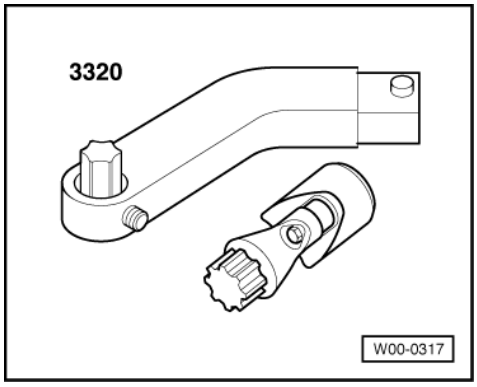

Protected by copyright. Copying for private or commercial purposes, in part or in whole, is not permitted unless authorised by Volkswagen AG. Volkswagen AG does not guarantee or accept any liability with respect to the correctness of information in this document. Copyright by Volkswagen AG.
satelettronica

- Adjustment wrench 3320 combined with Torx bit for loosening securing screws on door hinge, A-pillar.

1.3 - Assembly overview

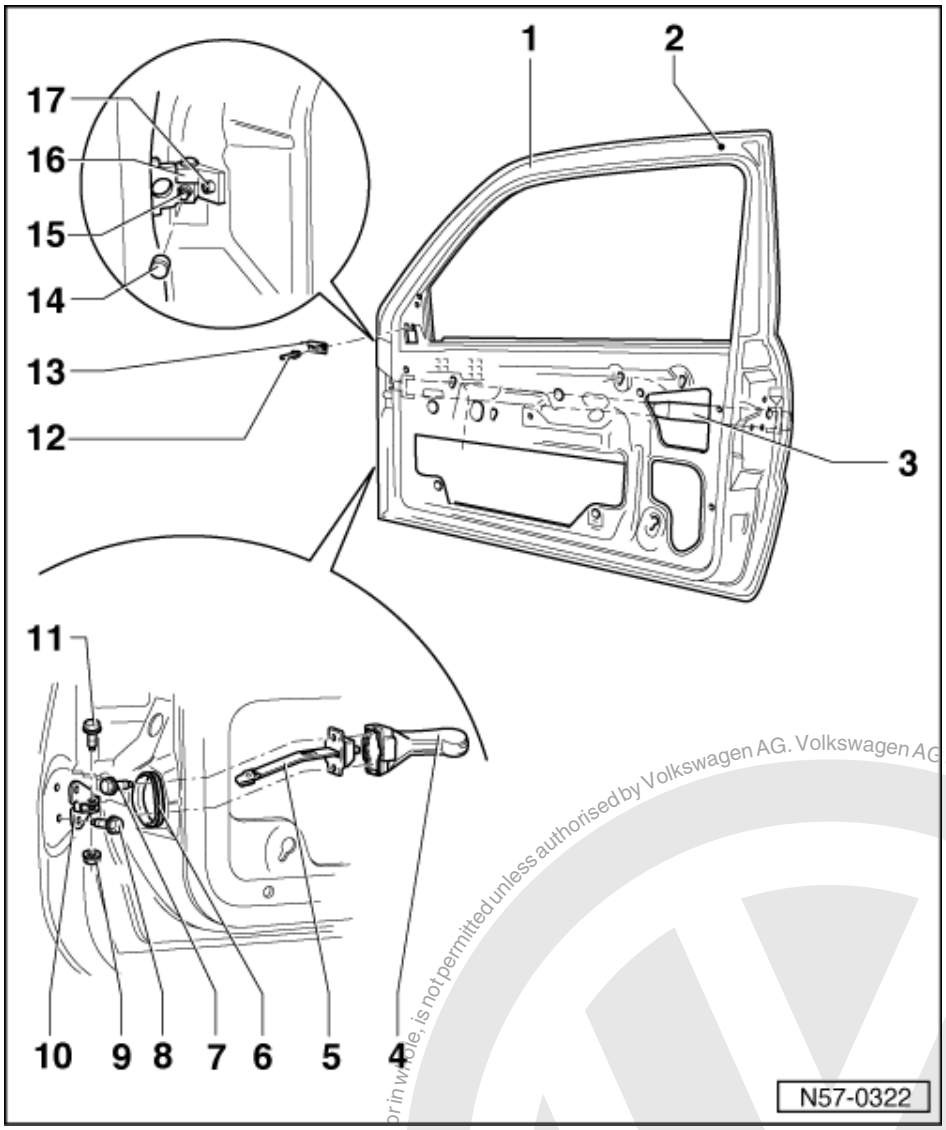

Notes:

- The side impact member cannot be removed from the door.
- Always replace door hinge screws after loosening them.

1 Door
- Removing and installing => Page 42
- Adjusting - at hinge within oversized holes, => Page 42

2 Buffer

3 Side impact member
- Cannot be removed

4 Door check strap sleeve

5 Door arrester

Protected by copyright. Copying for private or commercial purposes, in part or in whole, is not permitted unless authorised by Volkswagen AG. Volkswagen AG does not guarantee or accept any liability with respect to the correctness of information in this document. Copyright by Volkswagen AG.
satelettronica

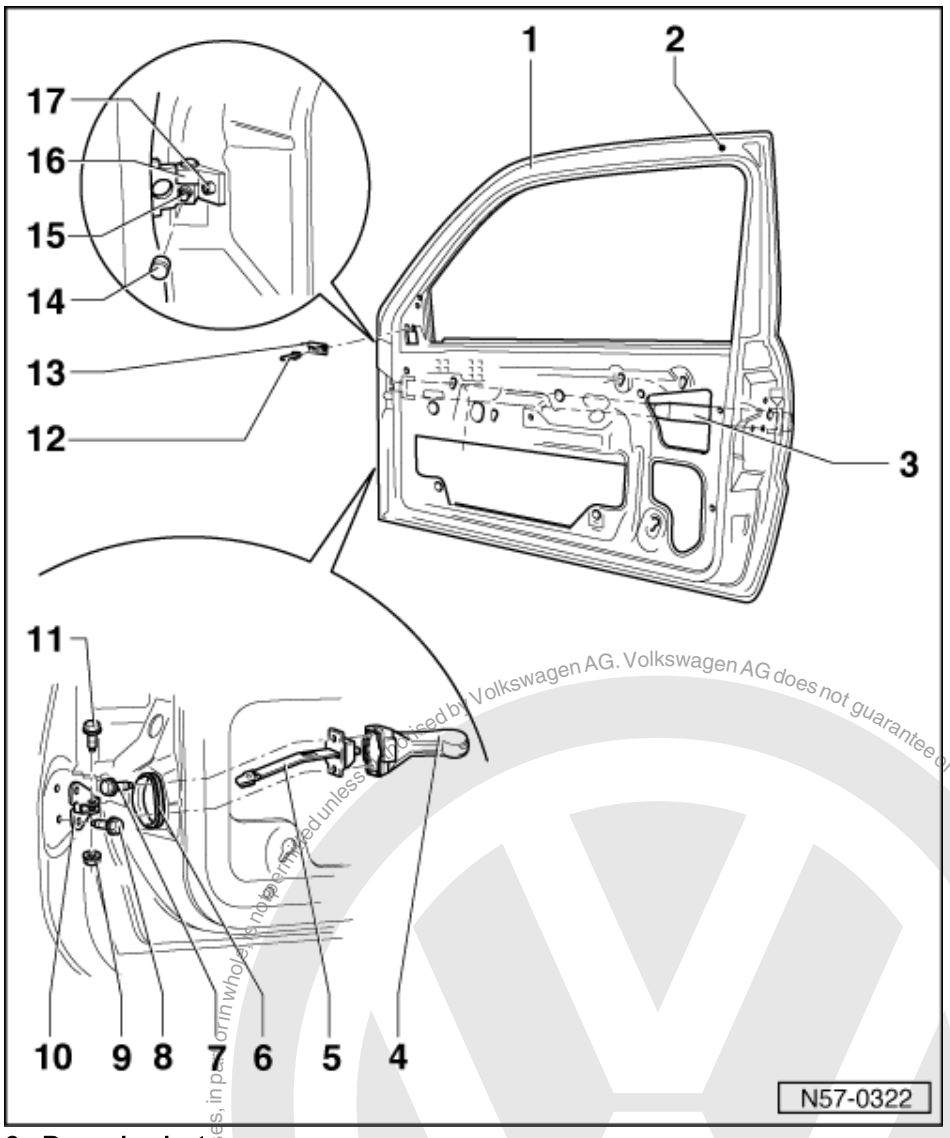

6 Door check strap cover
- Self-adhesive - bonded to door

7 Hexagon bolt
- Qty. 2
- 7.5 Nm

8 Hexagon bolt
- Qty. 2
- 8 Nm + 1/4 turn further (90°)

9 Locking nut
- 6.5 Nm

10 Mounting bracket
11 Threaded pin
12 Pop-rivet
13 Guide
14 Cover cap

Protected by copyright. Copying for private or commercial purposes, in part or in whole, is not permitted unless authorised by Volkswagen AG. Volkswagen AG does not guarantee or accept any liability with respect to the correctness of information in this document. Copyright by Volkswagen AG.
satelettronica

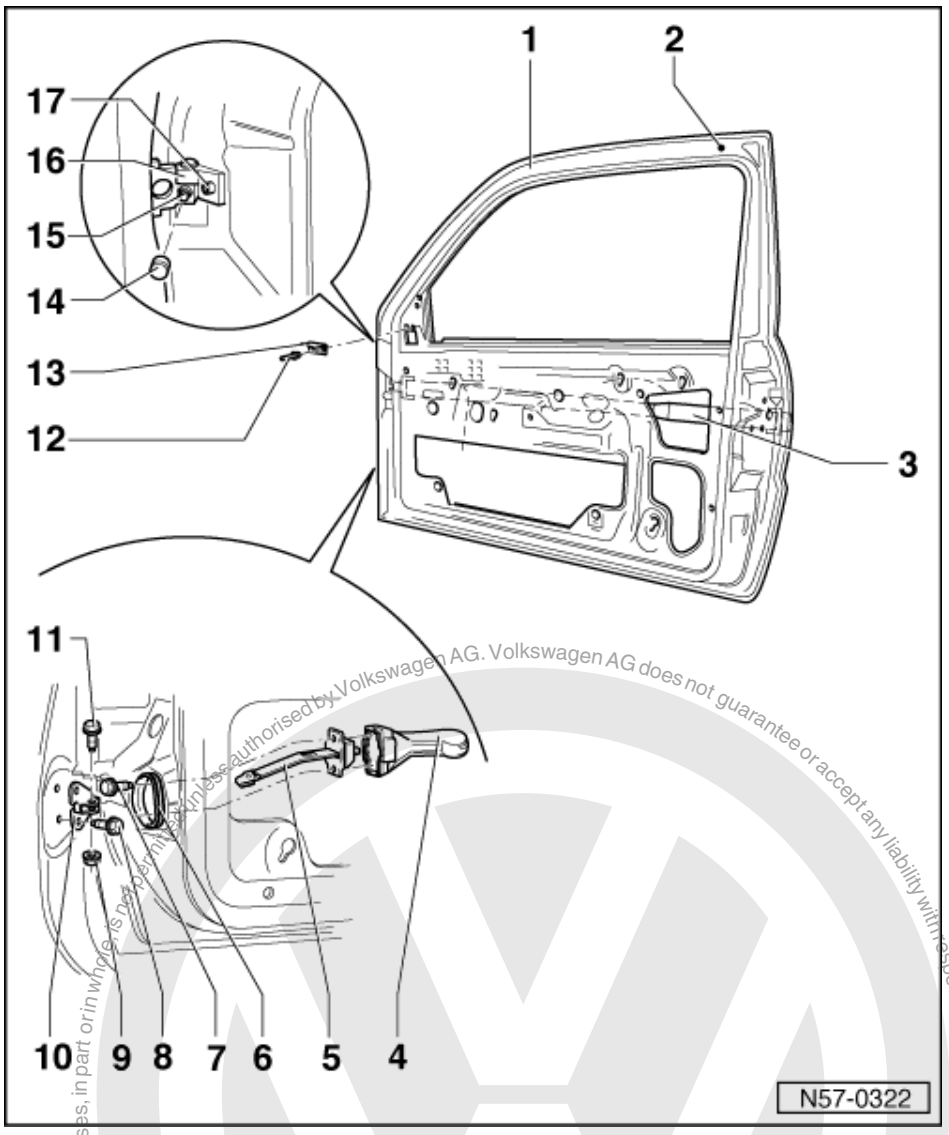

15 Grub screw
- 23 Nm

16 Door hinge
- Bolted to door and A-pillar with Torx bolt T 45. Hinge pin inserted into box section and secured by a grub screw
- 36 Nm

17 Torx bolt T 45
- 36 Nm

Protected by copyright. Copying for private or commercial purposes, in part or in whole, is not permitted unless authorised by Volkswagen AG. Volkswagen AG does not guarantee or accept any liability with respect to the correctness of information in this document. Copyright by Volkswagen AG.
satelettronica

1.4 - Removing and installing door

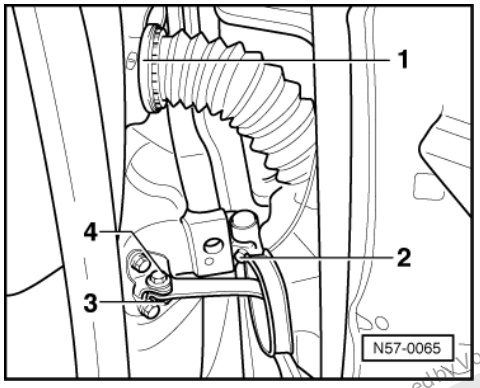

- -> Separate multi-pin connector -1- on A-pillar with commercially available 'C' spanner =>Page 38 .
- Unscrew nut -3- and pull out threaded pin -4-.
- Lever off cover cap -2- with screwdriver.
- Remove grub screw from upper and lower hinges.
- Grub screw tightening torque = 23 Nm.
- Lift door upwards out of hinge brackets.

1.5 - Adjusting door

To ensure a correct door adjustment the door hinges on the pillar must be loosened. Other measures such as raising the door upwards have no effect. Overpressuring thereafter will again cause the door to sack.

Use adjustment wrench 3320 combined with Torx bit T 45 to loosen securing bolts on door hinge, A-pillar.

Adjusting

- The doors are correctly adjusted if the clearance to the door opening when closed is even all round, does not project too much to the inside or outside and the contours align.

- Removing door =>Page 42 .
- Loosen the Torx T45 bolts on the upper or lower hinge using special tool 3320 with a long bit. Insert only so far as to allow the hinges to be moved with the door fitted.

- Fit door, tighten grub screw and set gaps.
- Carefully open door, loosen grub screw and remove door again.
- Tighten door hinge bolts
  Tightening torque: 36 Nm.

Note:

When using the special tool the tightening torque is to be reduced by 2 Nm to 34 Nm.

- Fit door, tighten grub screw and check adjustment. Repeat adjustment sequence if necessary.

The paint structure must be restored and, if necessary, anti-corrosion measures must be carried out.

Protected by copyright. Copyright by Volkswagen AG. Volkswagen AG does not guarantee or accept any liability with respect to the correctness of information in this document. Copyright by Volkswagen AG.
satelettronica

1.6 - Front door 09.96 >

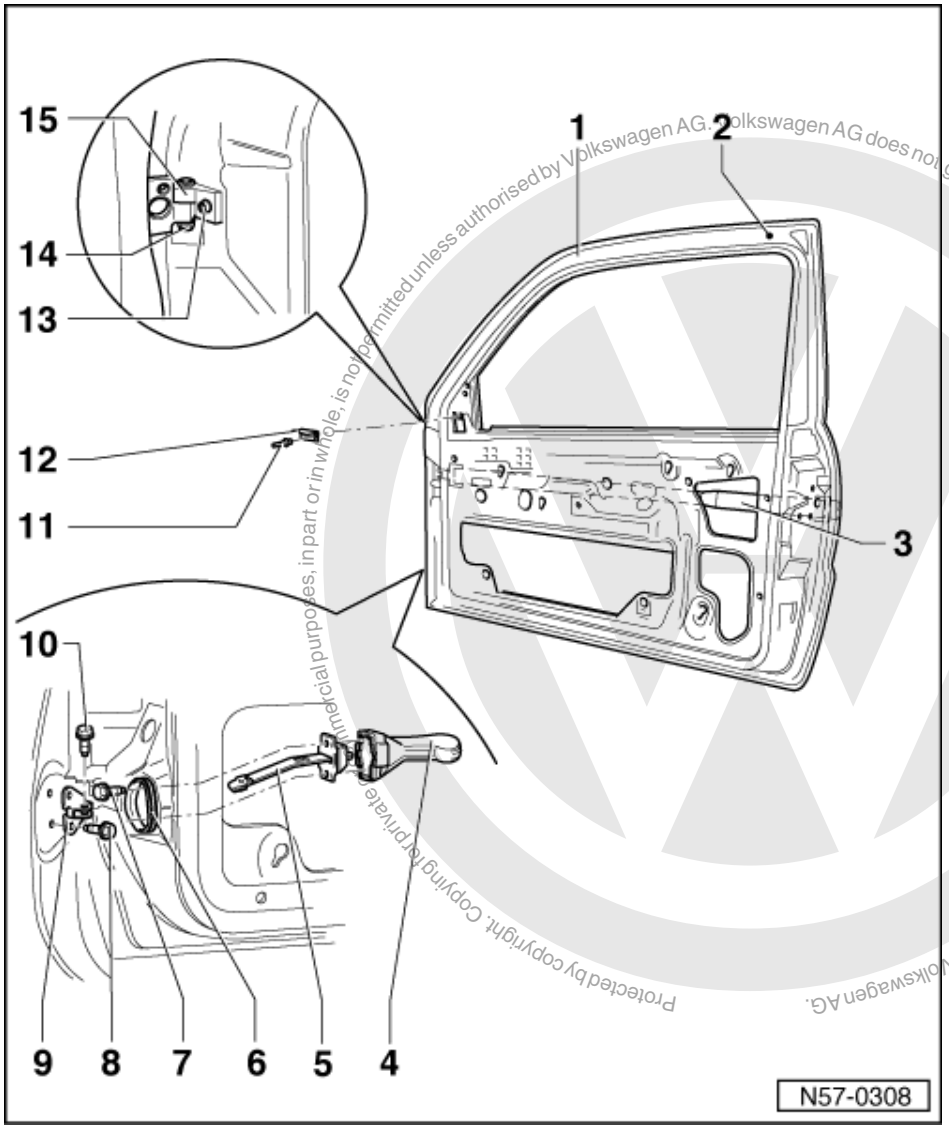

Protected by copyright. Copying for private or commercial purposes, in part or in whole, is not permitted unless authorised by Volkswagen AG. Volkswagen AG does not guarantee or accept any liability with respect to the correctness of information in this document. Copyright by Volkswagen AG.

satelettronica

Notes:

- The side impact member cannot be removed from the door.
- Always replace door hinge screws after loosening them.

1 Door
- Removing and installing => Page 46
- Adjusting - at hinge within oversized holes, => Page 46

2 Buffer

3 Side impact member
- Cannot be removed

4 Door check strap sleeve

5 Door arrester

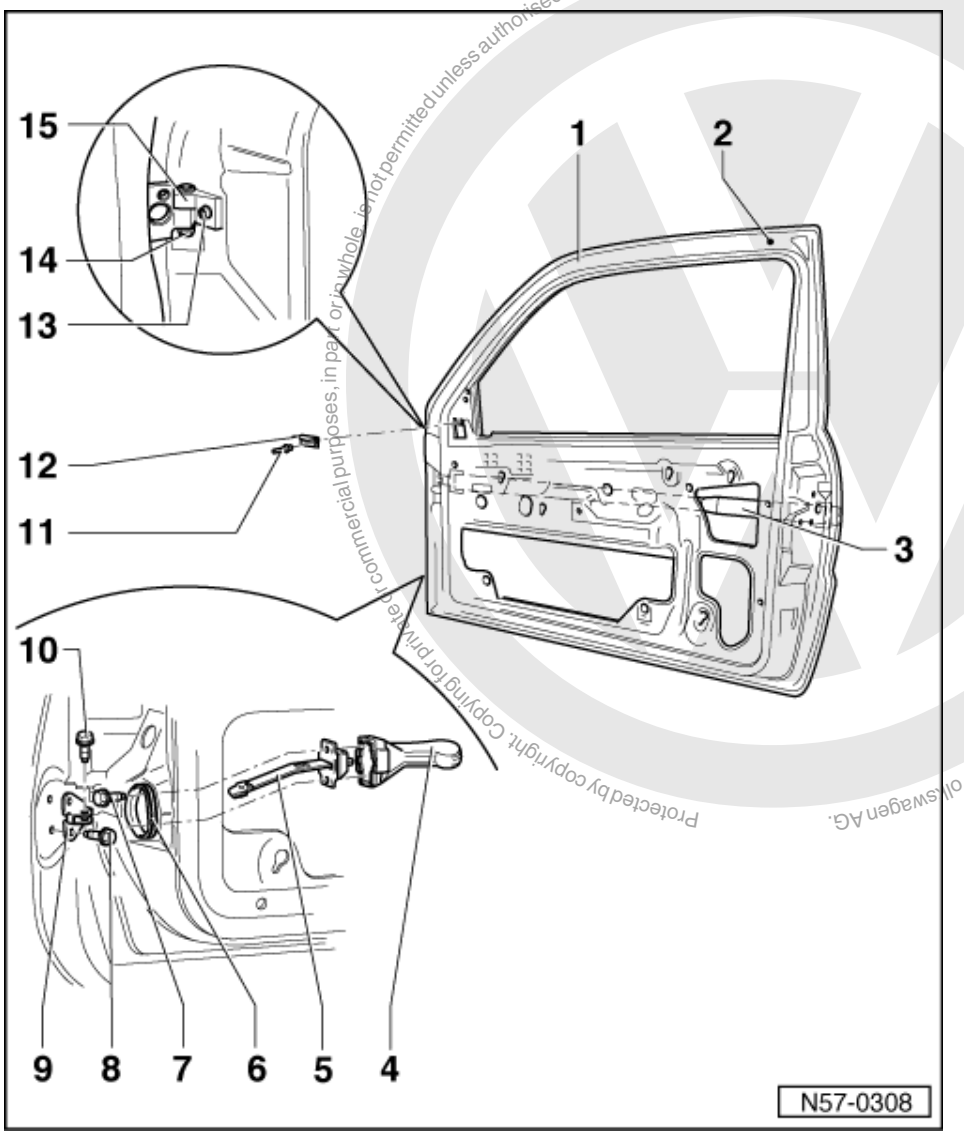

6 Door check strap cover
- Self-adhesive - bonded to door

7 Hexagon bolt
- Qty. 2
- 7.5 Nm

8 Hexagon bolt
- Qty. 2
- 8 Nm + 1/4 turn further (90°)

9 Mounting bracket

10 Threaded pin
- 7.5 Nm

11 Pop-rivet

12 Guide

13 Torx bolt T 45
- 36 Nm

Protected by copyright. Copyright by Volkswagen AG. Volkswagen AG does not guarantee or accept any liability with respect to the correctness of information in this document. Copyright by Volkswagen AG. Copying for private or commercial purposes, in part or in whole, is not permitted unless authorised by Volkswagen AG.
satelettronica

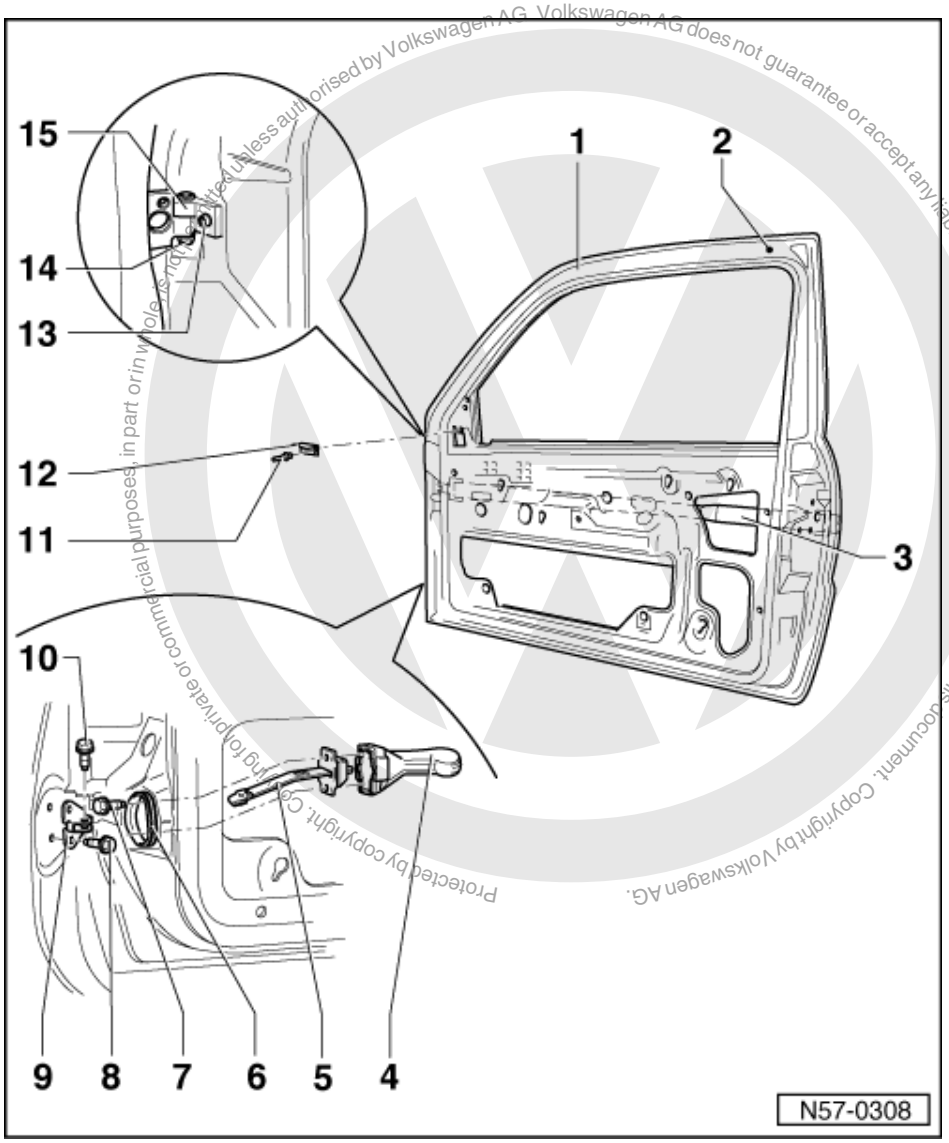

Volkswagen AG. Volkswagen AG does not guarantee or accept any liability with respect to the correctness of information in this document. Copyright by Volkswagen AG. Protected by copyright. Copying for private or commercial purposes, in part or in whole, is not permitted unless authorised by Volkswagen AG.

14 Conical nut

- 30 Nm

15 Door hinge

- Bolted to door and A-pillar with Torx bolt T 45. Hinge pin inserted into box section and secured with a conical nut

satelettronica

1.7 - Removing and installing front door 09.96 >

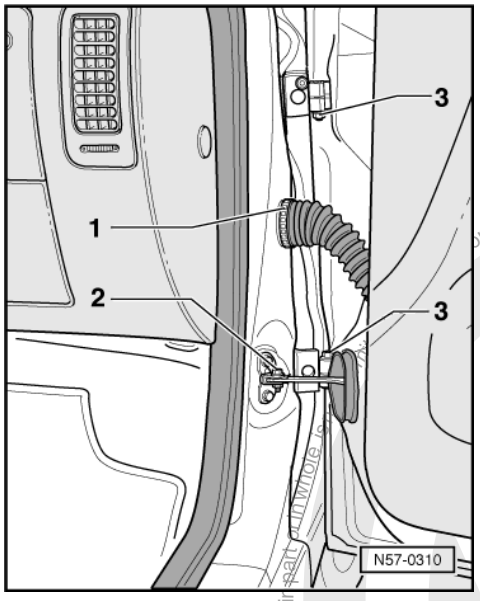

- -> Separate multi-pin connector -1- on A-pillar with commercially available 'C' spanner =>Page 38 .
- Remove threaded pin -2- (7.5 Nm)
- Remove conical nuts -3- from upper and lower hinge pins.
- Conical nut tightening torque = 30 Nm.
- Lift door upwards out of hinge brackets.

1.8 - Adjusting front door 09.96 >

To ensure a correct door adjustment the door hinges on the pillar must be loosened. Other measures such as raising the door upwards have no effect. Overpressuring thereafter will again cause the door to sack.

Use adjustment wrench 3320 combined with Torx bit T 45 to loosen securing bolts on door hinge, A-pillar.

Adjusting

- The doors are correctly adjusted if the clearance to the door opening when closed is even all round, does not project too much to the inside or outside and the contours align.

- Removing door =>Page 46
- Loosen the Torx T45 bolts on the upper or lower hinge using special tool 3320 with a long bit. Insert only so far as to allow the hinges to be moved with the door fitted.

- Fit door, tighten conical nut and set gaps.
- Carefully open door, loosen conical nut and remove door again.
- Tighten door hinge bolts
  Tightening torque: 36 Nm.

Note:

When using the special tool the tightening torque is to be reduced by 2 Nm to 34 Nm.

- Fit door, tighten conical nut and check adjustment. Repeat adjustment sequence if necessary.

The paint structure must be restored and, if necessary, anti-corrosion measures must be carried out.

Protected by copyright. Copyright by Volkswagen AG. Volkswagen AG does not guarantee or accept any liability with respect to the correctness of information in this document. Copyright by Volkswagen AG.
satelettronica

1.9 - Driver's door of postal vehicles

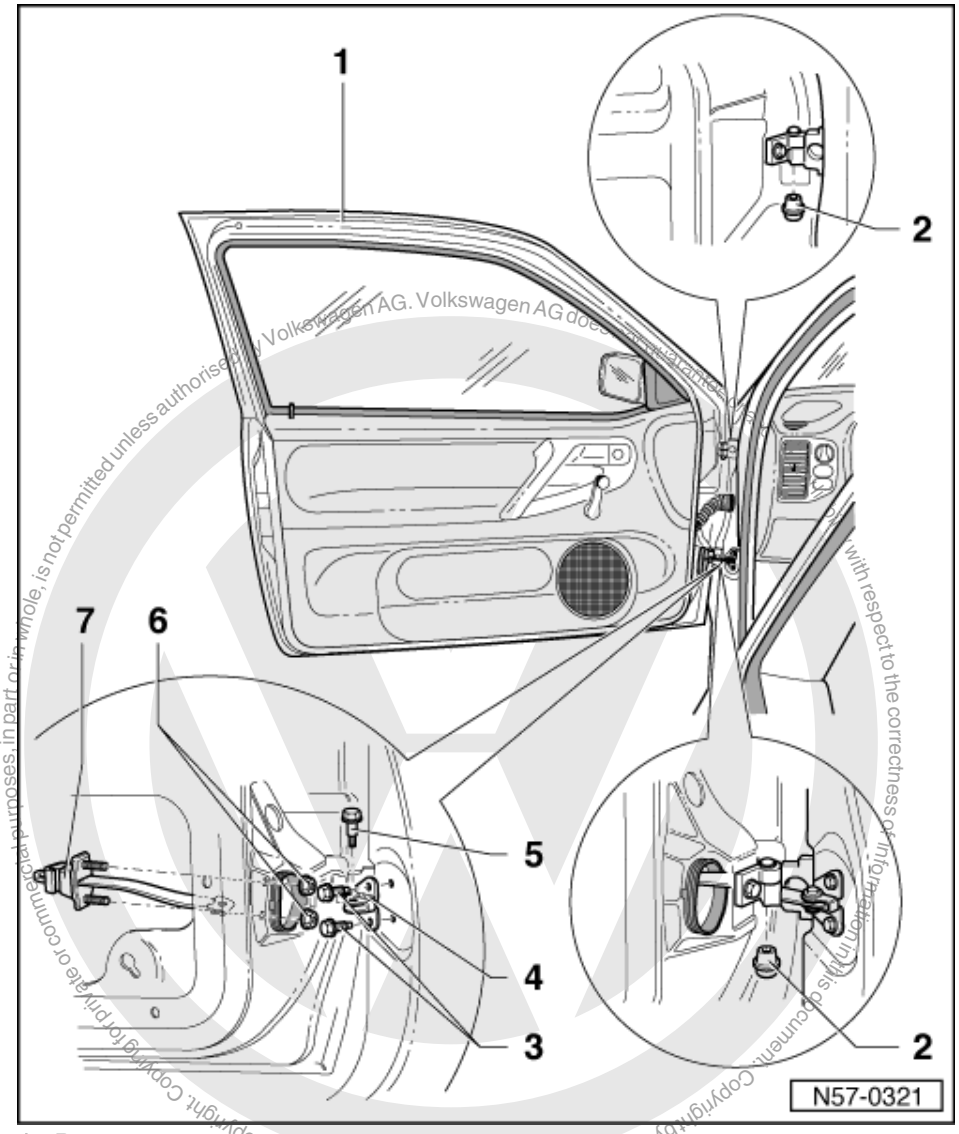

1 Door
- Removing and installing => Page 46
- Adjusting - at hinge within oversized holes, => Page 46

2 Conical nut
- 30 Nm

3 Hexagon head bolt
- Qty. 2
- 8 Nm + 1/4 turn further (90°)

4 Mounting bracket

5 Threaded pin
- 9 Nm

satelettronica

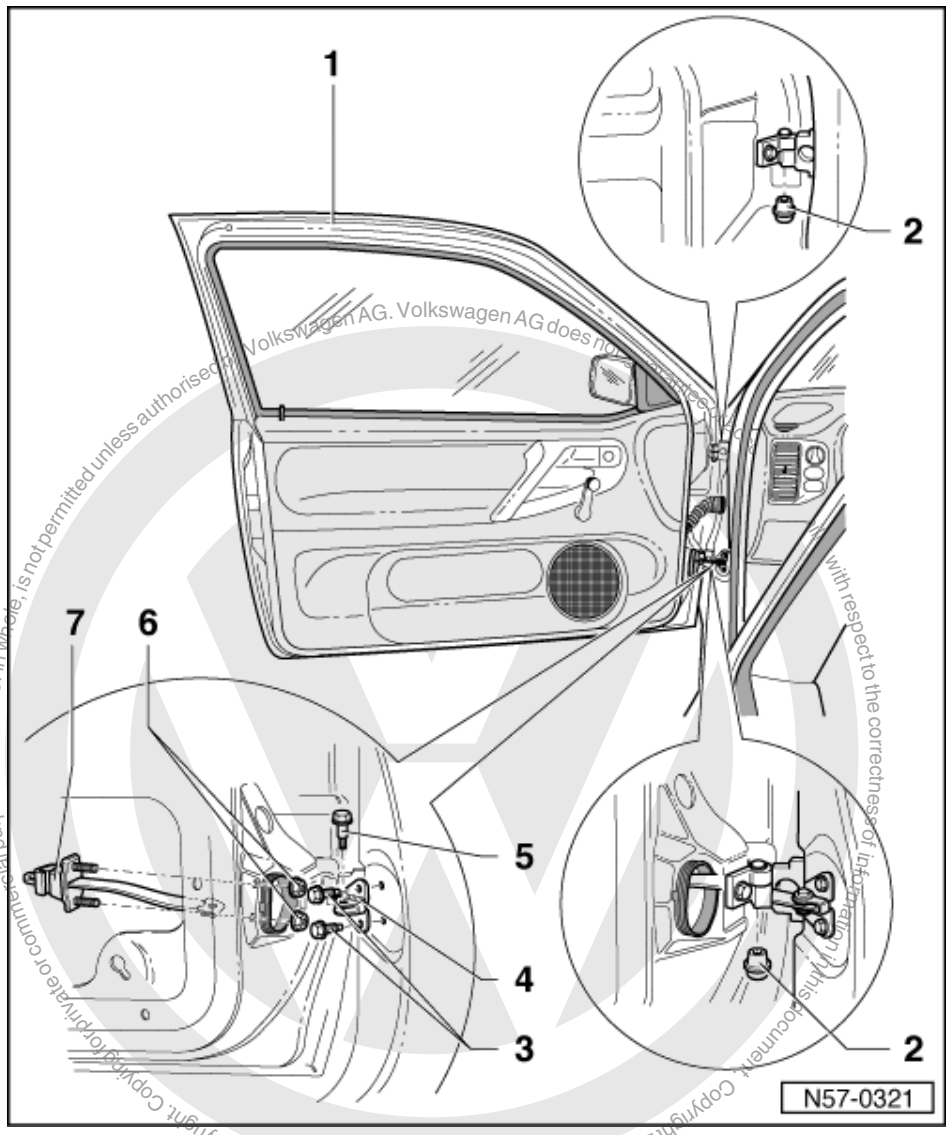

Protected by copyright. Copyright by Volkswagen AG.

6 Hexagon nut
- Qty. 2
- 8 Nm + 1/4 turn further (90°)

7 Door arrester
- With rubber buffer and studs

satelettronica

1.10 - Door lock - Assembly overview

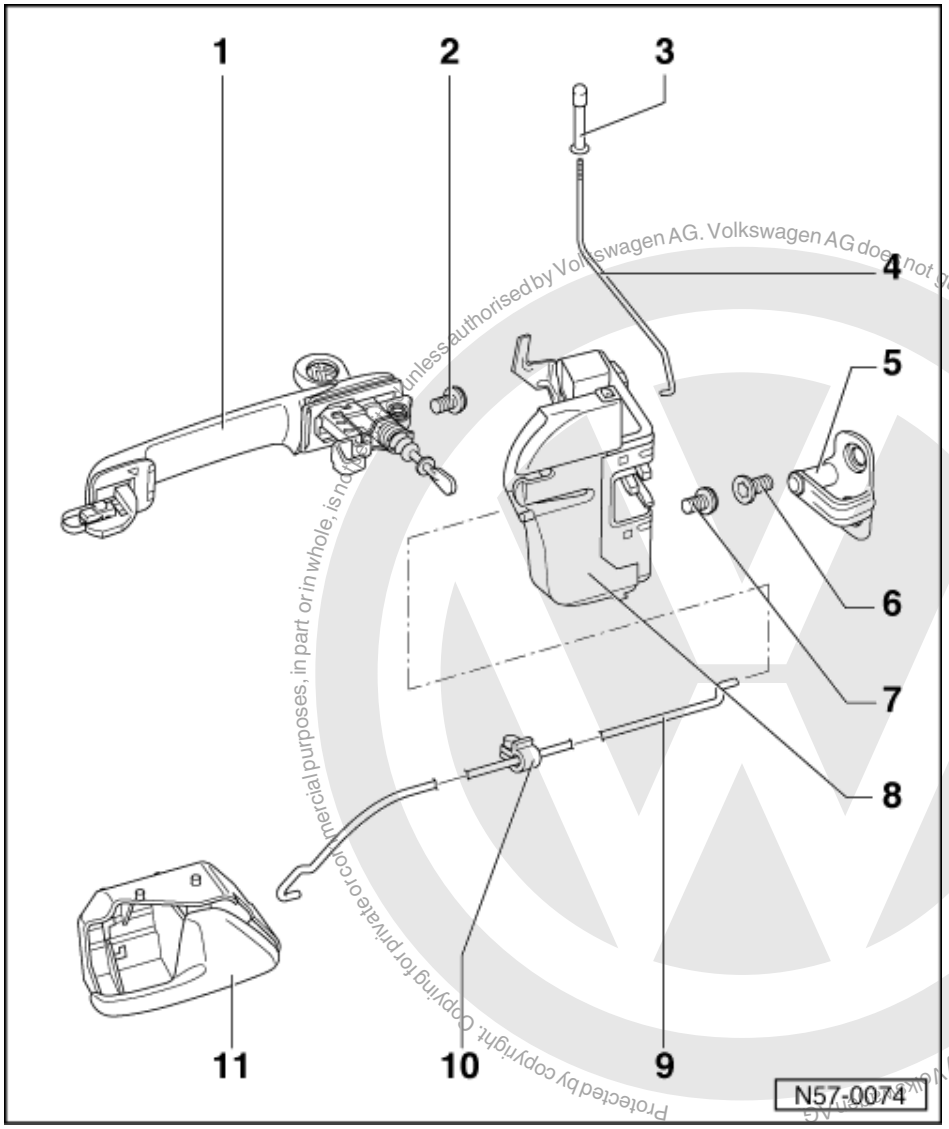

Protected by copyright. Copyright for private or commercial purposes, in part or in whole, is not permitted unless authorised by Volkswagen AG. Volkswagen AG does not guarantee or accept any liability with respect to the correctness of information in this document. Copyright by Volkswagen AG

satelettronica

1 Door handle
- Removing and installing => Page 54
- Lubricate with G 000 400 prior to installation

2 Torx screw T 30
- 8 Nm

3 Locking knob
- Screwed on

4 Locking rod

5 Striker pin

6 Torx bolt T 40
- 20 Nm

Protected by copyright. Copying for private or commercial purposes, in part or in whole, is not permitted unless authorised by Volkswagen AG. Volkswagen AG does not guarantee or accept any liability with respect to the correctness of information in this document. Copyright by Volkswagen AG.

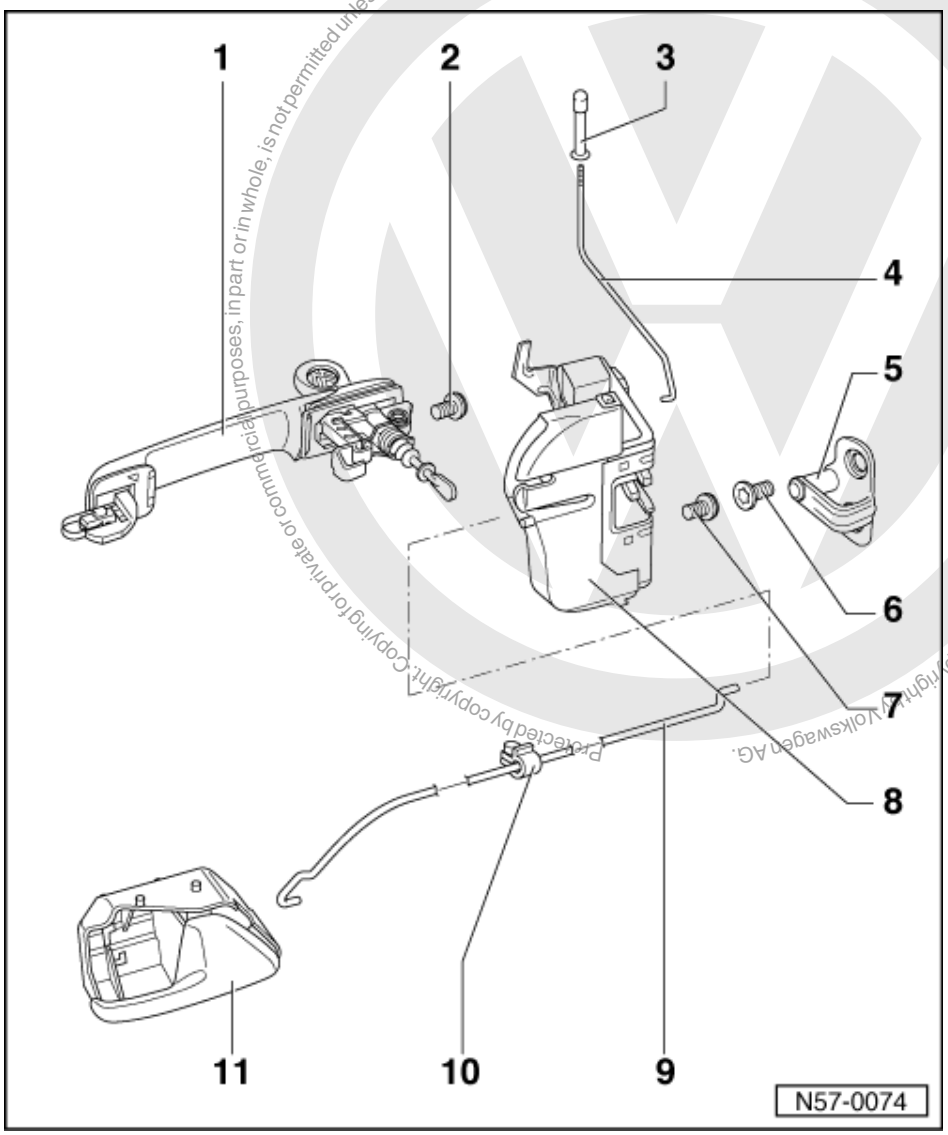

7 Torx screw T 30
- 8 Nm

8 Door lock
- Removing and installing => Page 50
- Door window must be closed when removing and installing

9 Pull rod

10 Clip

11 Interior release handle
- Removing =>Page 52

1.11 - Removing and installing door lock

Door window must be closed.

- Remove door handle => Page 54
- Remove door trim.

satelettronica

Page generated by Copyright Copy Volkswagen AG. Volkswagen AG does not guarantee or accept any liability with respect to the correctness of information in this document. Copyright by Volkswagen AG. Not for commercial purposes, in part or in whole, is not permitted unless authorised by Volkswagen AG.

=> General body repairs, interior; Repair group 70; Door trim; Removing and installing front door trim Door trim Removing and installing front door trim

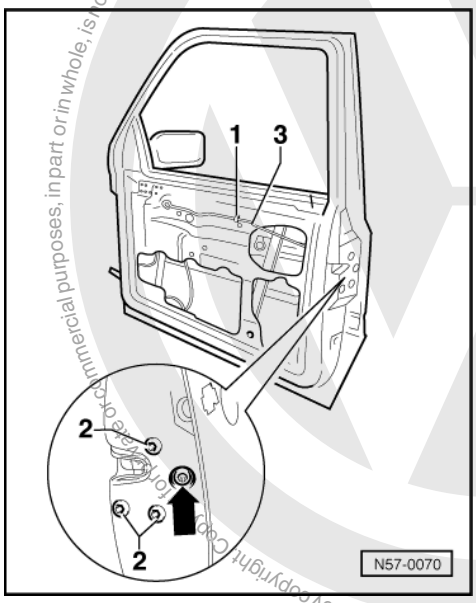

- Carefully pull off door insulation film.
- -> Remove T 25 Torx bolts -2-
  Tightening torque: 8 Nm.
- Unclip rod clip -1-, lift door lock up to installation opening and unhook pull rod -3-.
- On vehicles with central locking pull off pressure line and separate connector.

Installing:

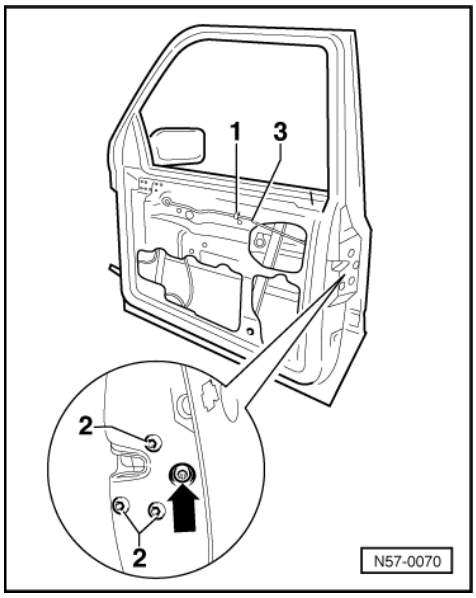

- -> Loosen tolerance screw -arrow- prior to installing door lock.

After installing lock/handle, tighten adjustment screw (adjustment screw Torx T 20, tightening torque = 3 Nm).
Left lock - right-hand thread
Right lock - left-hand thread

The adjustment is carried out by tightening the adjusting screw.

satelettronica

1.12 - Removing inner release handle

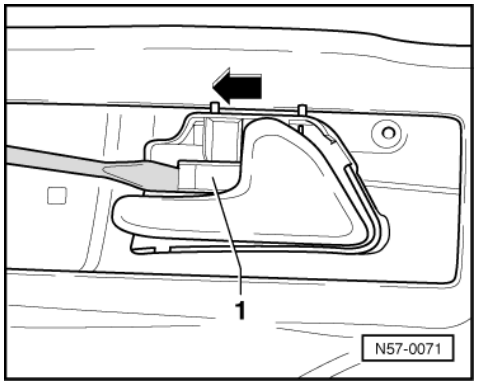

- -> Press securing clip -1- out of hole in door inner panel.
- Press inner release handle in forwards direction -arrow- out of the securing holes.

1.13 - Door handle - Assembly overview

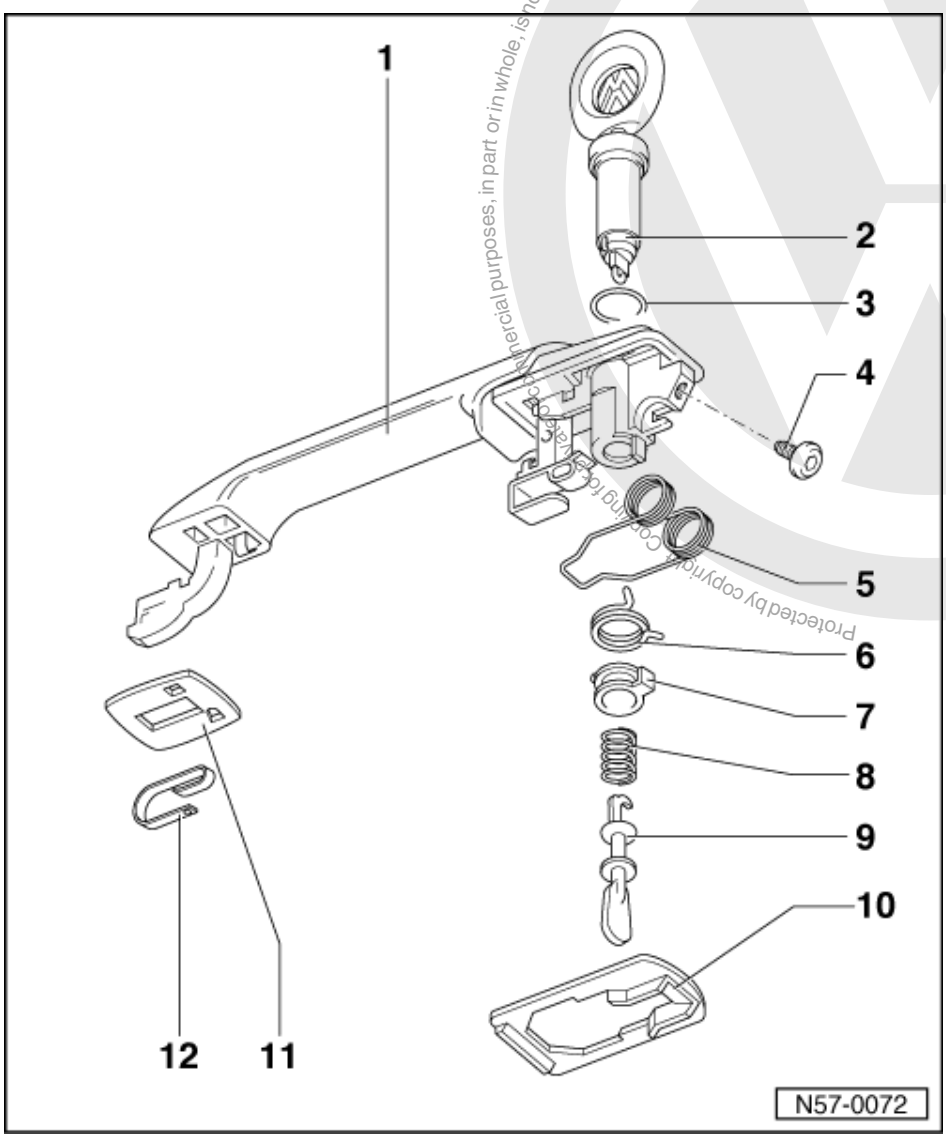

1 Door handle

- Removing and installing => Page 54

Protected by copyright. Copying for commercial purposes, in part or in whole, is not permitted unless authorised by Volkswagen AG. Volkswagen AG does not guarantee or accept any liability with respect to the correctness of information in this document. Copyright by Volkswagen AG.
satelettronica

2 Lock cylinder
- Only press out carefully with key inserted.
- Common key locking can be maintained in vehicle by repositioning or attaching locking plates.
- Maintaining common key locking => Page 56
- Prior to installation, lubricate lock cylinder with G 000 400

3 Seal

4 Torx screw T 30
- 8 Nm

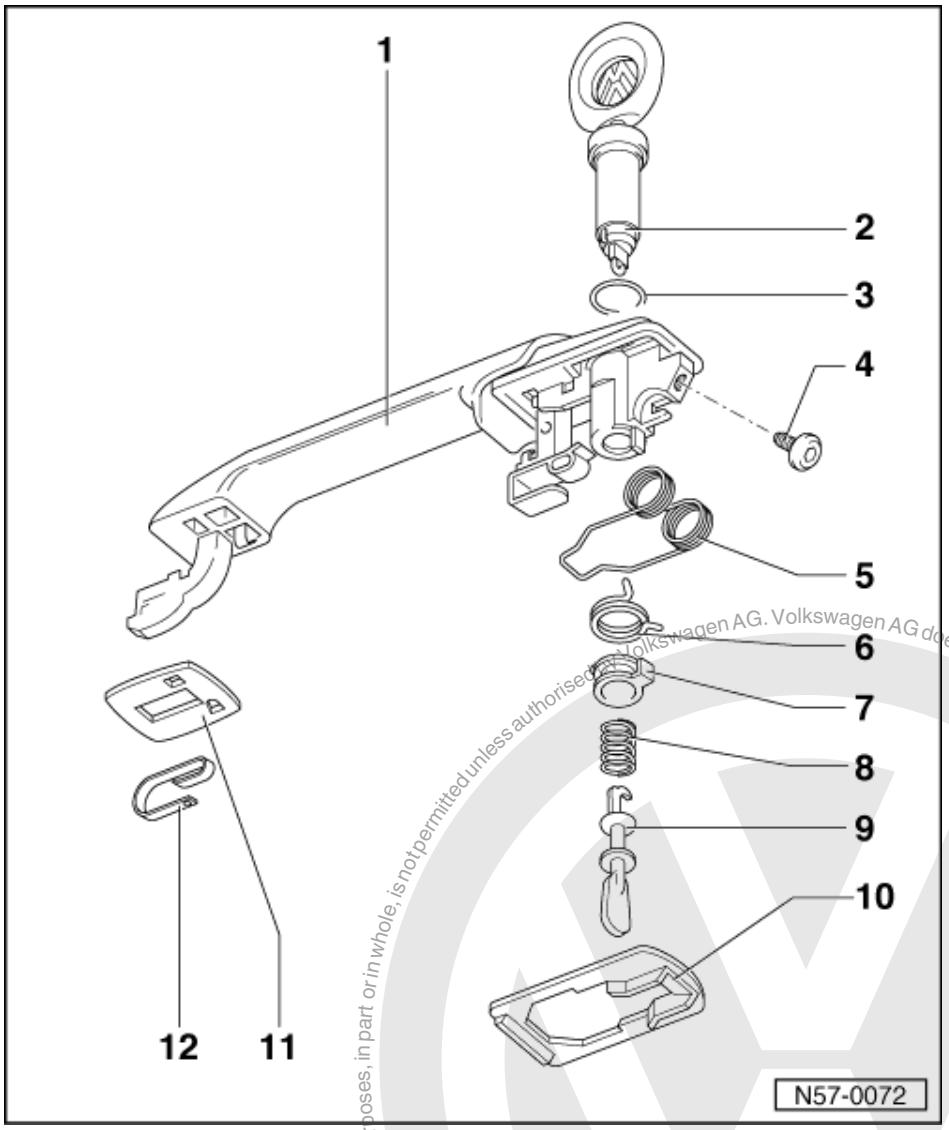

5 Spring
6 Coupling plate spring
7 Coupling plate
8 Connecting rod spring
9 Connecting rod
- Hooked into lock cylinder

10 Backing
11 Backing
12 Leaf spring

Protected by copyright. Copying for private or commercial purposes, in part or in whole, is not permitted unless authorised by Volkswagen AG. Volkswagen AG does not guarantee or accept any liability with respect to the correctness of information in this document. Copyright by Volkswagen AG.
satelettronica

1.14 - Removing and installing door handle

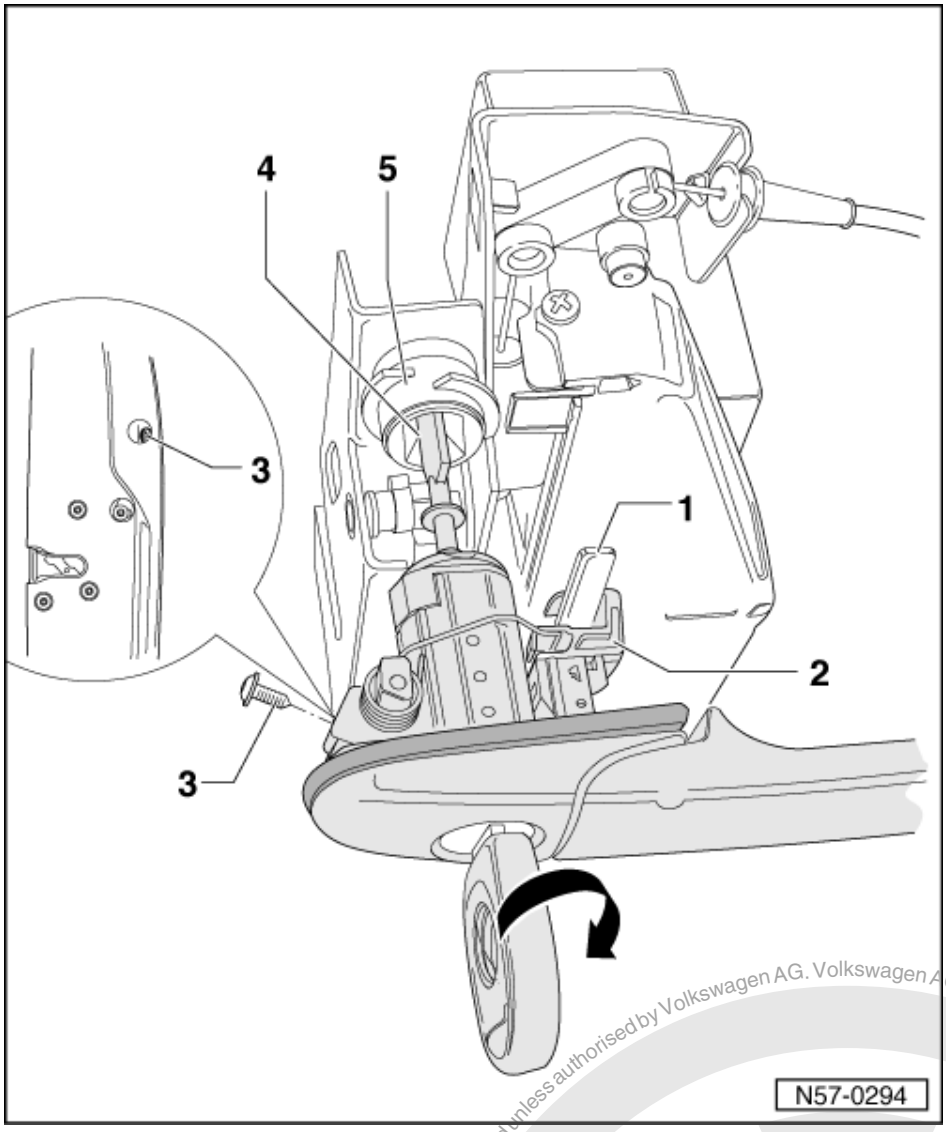

Removing

- Fit key in door handle lock cylinder.
- Remove torx screw -3-.
- Push door handle forwards, turn key through 45°to right (door handle coupling plate -2- releases door lock operating lever -1-) and swing door handle out of door.

Fitting instructions:

Follower -5- for paddle -4- must be in vertical position before inserting door handle.

Protected by copyright. Copying for private or commercial purposes, in part or in whole, is not permitted unless authorised by Volkswagen AG. Volkswagen AG does not guarantee or accept any liability with respect to the correctness of information in this document. Copyright by Volkswagen AG.
satelettronica

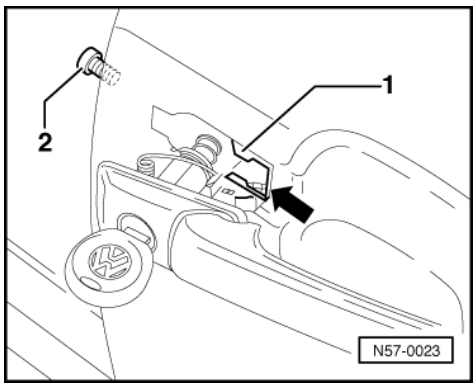

Installing

- -> Check clip -1- for damage and renew if necessary.
- Pivot in door handle (turn door key 45° to right when doing this) so that the door handle slides past the door panel without an air gap -arrow-.
- Screw in Torx screw -2-.
  Tightening torque: 8 Nm.

Left-hand lock - right-hand thread
Right-hand lock - left-hand thread

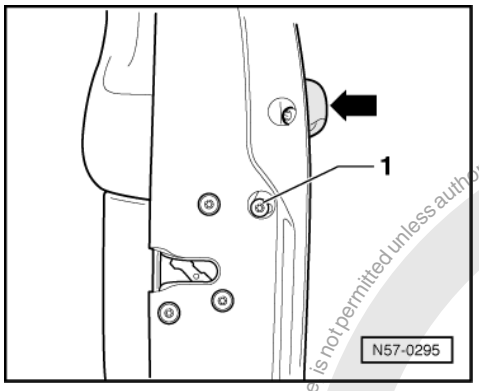

- -> Loosen tolerance screw -1- on door lock.
- Press in door handle.
- Tighten tolerance screw (Torx T 20)
  Tightening torque = 3 Nm.

Do not move tolerance screw sideways when tightening (e.g. by supporting the key on edge of hole). The door handle must be pushed onto door outer panel.

Tightening the tolerance screw also takes care of the adjustment.

Perform functional check afterwards.

Protected by copyright. Copying for private or commercial purposes, in part or in whole is not permitted unless authorised by Volkswagen AG. Volkswagen AG does not guarantee or accept any liability with respect to the correctness of information in this document. Copyright by Volkswagen AG.
satelettronica

1.15 - Maintaining common key locking

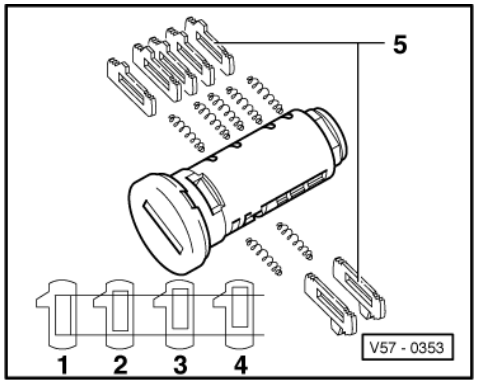

-> Common key locking can be maintained as in vehicle by repositioning or attaching locking plates -5-.

1, 2, 3, and 4 - possible locking plate sizes.

Refer to Special Information Body No. 18, dated 06.89, for additional information.

Protected by copyright. Copying for private or commercial purposes, in part or in whole, is not permitted unless authorised by Volkswagen AG. Volkswagen AG does not guarantee or accept any liability with respect to the correctness of information in this document. Copyright by Volkswagen AG.
satelettronica

1.16 - Door handle with inner profile key - Assembly overview

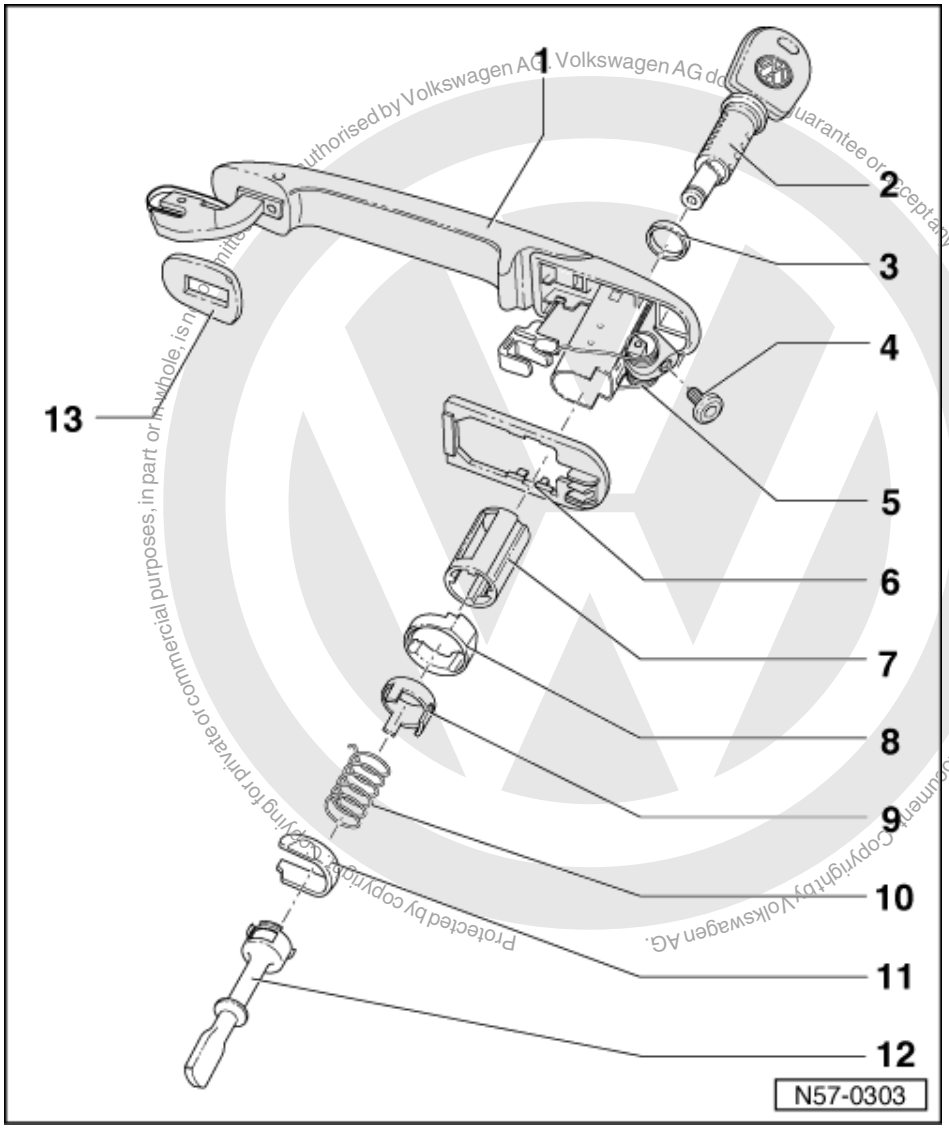

Protected by copyright. Copying for private or commercial purposes, in part or in whole, is not permitted unless authorised by Volkswagen AG. Volkswagen AG does not guarantee or accept any liability with respect to the correctness of information in this document. Copyright by Volkswagen AG.

1 Door handle
- Removing and installing => Page 54

2 Lock cylinder
- Removing => Page 59
- Prior to installation, lubricate lock cylinder with G 000 400

3 Seal

4 Torx socket head screw T 30
- 8 Nm

satelettronica

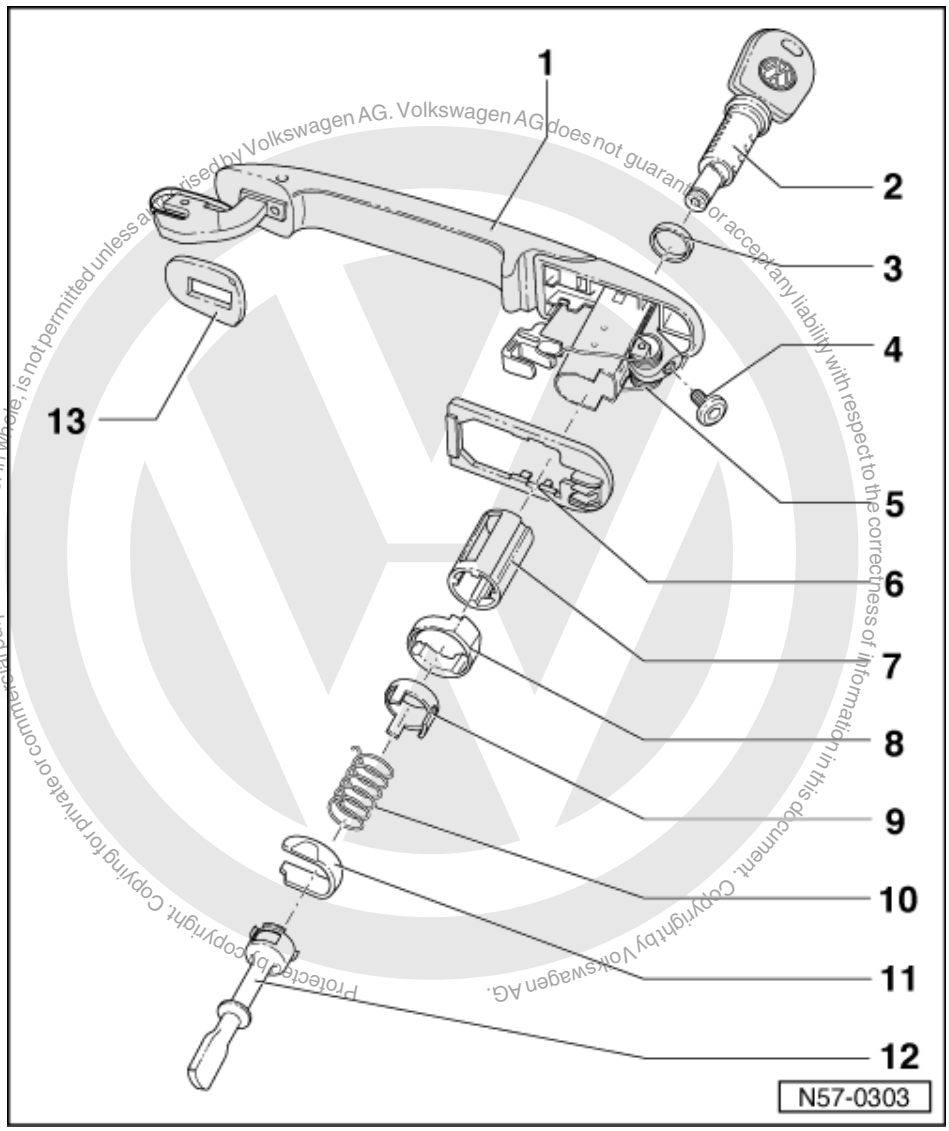

5 Spring
6 Backing
7 Free wheel sleeve
8 Support
9 Coupling plate
10 Spring
11 Locking plate
12 Paddle / eccentric
13 Backing

Protected by copyright. Copying for private or commercial purposes, in part or in whole, is not permitted unless authorised by Volkswagen AG. Volkswagen AG does not guarantee or accept any liability with respect to the correctness of information in this document. Copyright by Volkswagen AG.

satelettronica

1.17 - Removing and installing lock cylinder with inner profile key

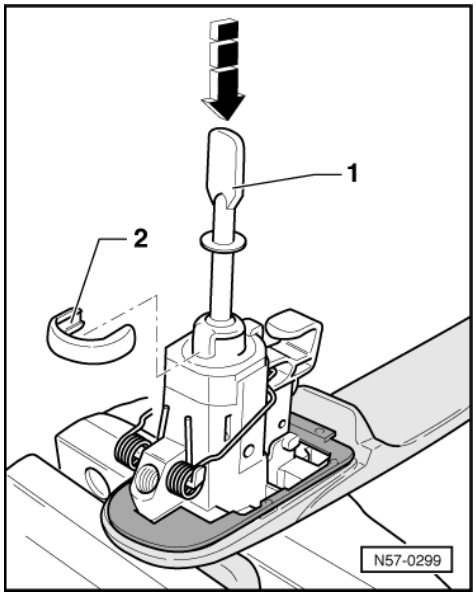

Removing

- -> Clamp door handle (on key) in a vice using vice clamps.
- Press paddle -1- down in direction of arrow.
- Pull out locking plate -2-.
- Take off paddle and spring.

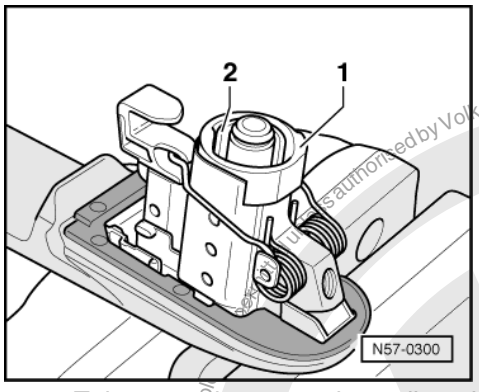

- -> Take mounting -1- and coupling plate -2- off lock cylinder.

Protected by copyright. Copying for private or commercial purposes, in part or in whole, is not permitted unless authorised by Volkswagen AG. Volkswagen AG does not guarantee or accept any liability with respect to the correctness of information in this document. Copyright by Volkswagen AG.
satelettronica

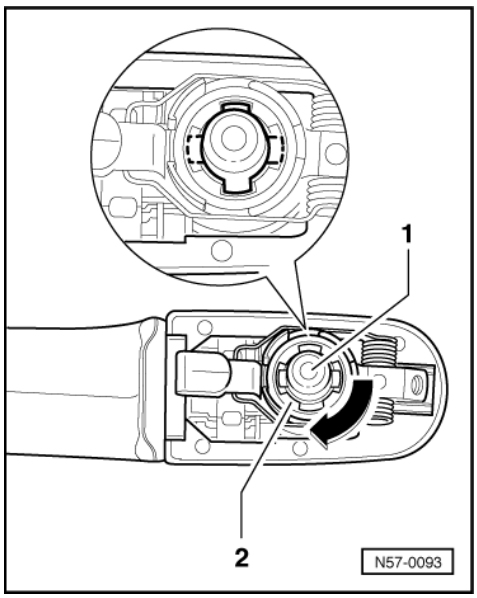

- -> Turn lock cylinder -1- through 90°.
- When doing this, ensure that the free wheel sleeve -2- does not also turn.
- Take lock cylinder out.

Installing

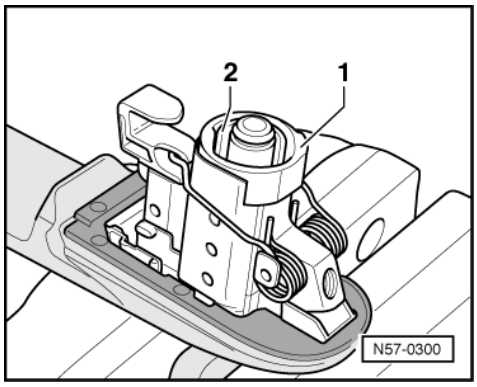

Lock cylinder inserted into handle.

- -> Release door handle from vice and vice clamps.
- Fit mounting -1- and coupling plate -2 onto lock cylinder.

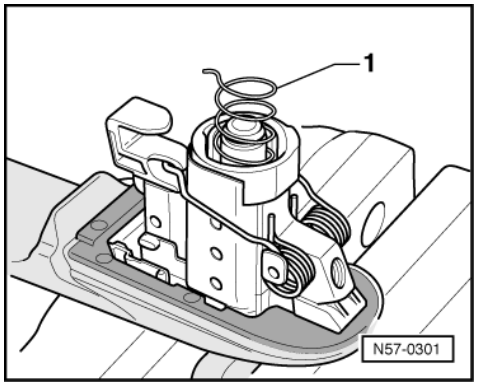

- -> Fit spring -1- into lock cylinder housing so that the spring end points to rear.

satelettronica
Protected by copyright. Copying for private or commercial purposes, in part or in whole, is not permitted unless authorised by Volkswagen AG. Volkswagen AG does not guarantee or accept any liability with respect to the correctness of information in this document. Copyright by Volkswagen AG.

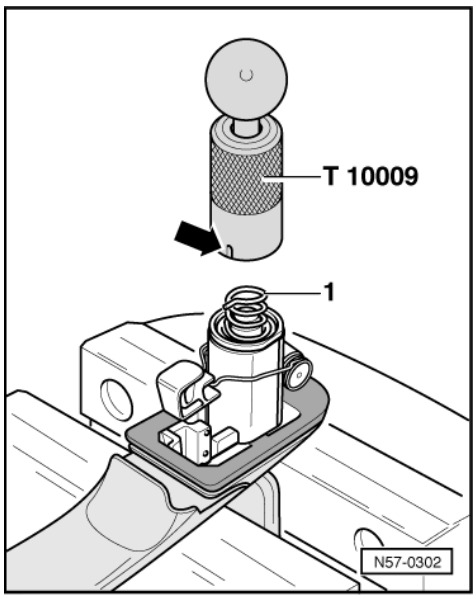

- -> Fit assembly tool T10009 so that smaller slot -arrow- is on spring -1-.

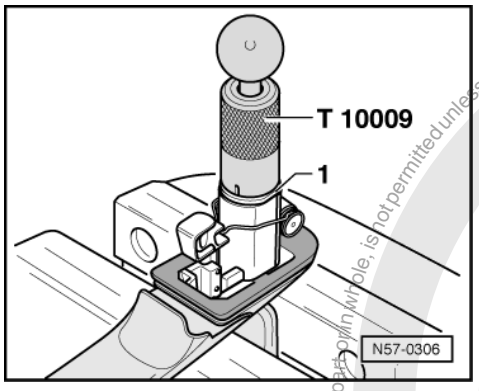

- -> Press outer sleeve of assembly tool down until it lies on mounting -1-.

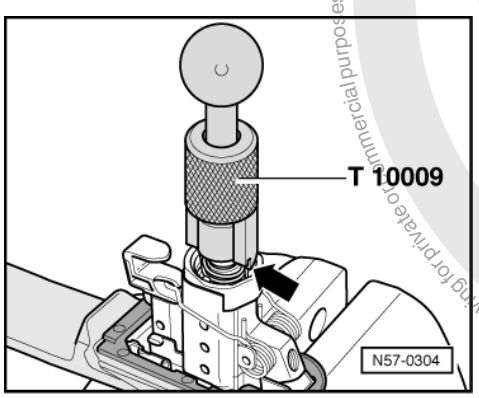

The assembly tool is shown sectionised to show the following assembly steps more clearly.

- -> Turn assembly tool T10009 180° to right until the slot -arrow- points forwards.

Protected by copyright. Copying for private or commercial purposes, in part or in whole, is not permitted unless authorised by Volkswagen AG. Volkswagen AG does not guarantee or accept any liability with respect to the correctness of information in this document. Copyright by Volkswagen AG.
satelettronica

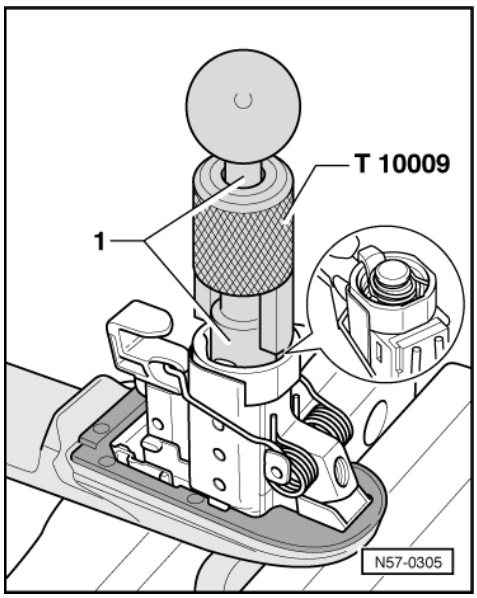

- -> Press assembly tool centre rod -1- down. This presses the spring together.
- The end of the spring jumps out of the slot and engages in the mounting.

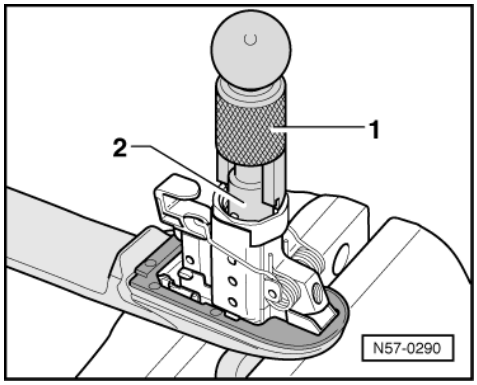

- -> Now lift the outer sleeve -1- of the assembly tool up carefully.

  Now the centre rod -2- is visible which is pushed over the lock cylinder.

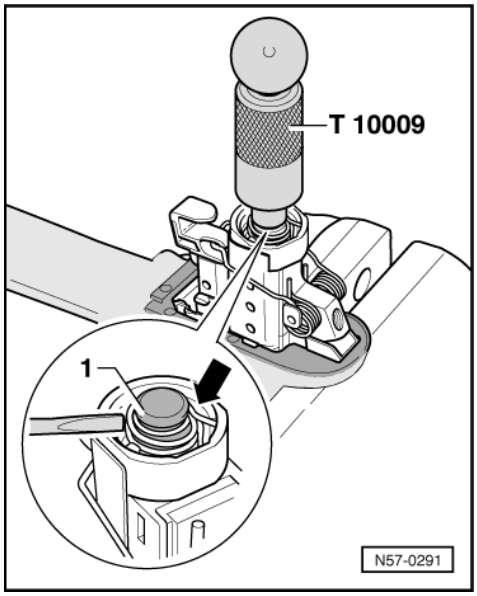

- -> Lift assembly tool T10009 until the groove in lock cylinder is visible.
- Spring -1- must be engaged in mounting -arrow-.
- The spring can be pushed into the slot in the lock cylinder with a screwdriver if an aid is required.

Protected by copyright. Copying for private or commercial purposes, in part or in whole, is not permitted unless authorised by Volkswagen AG. Volkswagen AG does not guarantee or accept any liability with respect to the correctness of information in this document. Copyright by Volkswagen AG.
satelettronica

- Remove assembly tool.

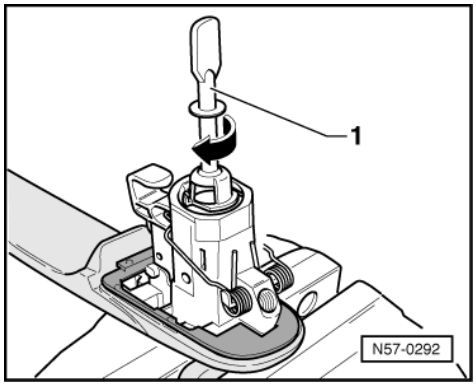

- -> Fit paddle onto spring and press down.
- A circular movement of the paddle releases the spring from the slot in the lock cylinder and it can be pressed together again.

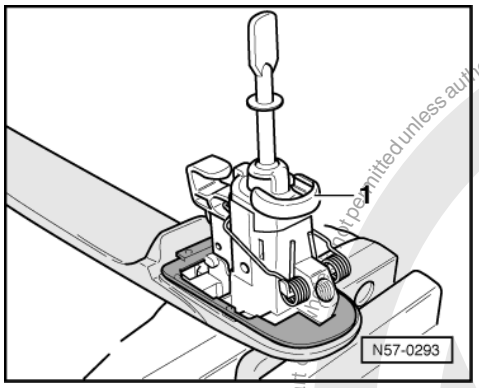

- -> Insert locking plate.

Perform functional check.

1.18 - Door seals

Door seals are fitted in series production with a sealant, they are placed on the door flange and then rolled on.

Note:

If they are removed the sealant will spread on the inside of the seal and the flanks will be bent out slightly. If the seal is then refitted there is no guarantee that it will fit tightly and seal.

Therefore each seal which is removed completely should be replaced by a so called "hammer blow" seal.

When seals have been partially removed squeeze the flanks together before refitting.

Copyright by Volkswagen AG. Volkswagen AG does not guarantee or accept any liability with respect to the correctness of information in this document. Copying for private or commercial purposes, in part or in whole, is not permitted unless authorised by Volkswagen AG.
satelettronica

1.19 - Removing and installing door inner seal

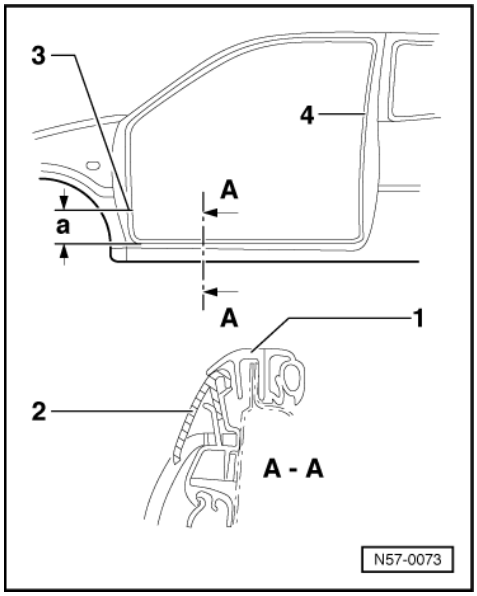

-> Door inner seal -1- grips over trim -2-.

- Pull door inner seal off body flange.
- When installing seal start on the B pillar at the height of the door trim.
- Joint position -3- (vulcanised) on the A pillar
  Dimension a = 200 ± 20 mm.
- For two-colour door inner seals the joint position is on the B pillar at the height of the trim -4-.

Protected by copyright. Copying for private or commercial purposes, in part or in whole, is not permitted unless authorised by Volkswagen AG. Volkswagen AG does not guarantee or accept any liability with respect to the correctness of information in this document. Copyright by Volkswagen AG.
satelettronica

2 - Central locking

2.1 - Central locking

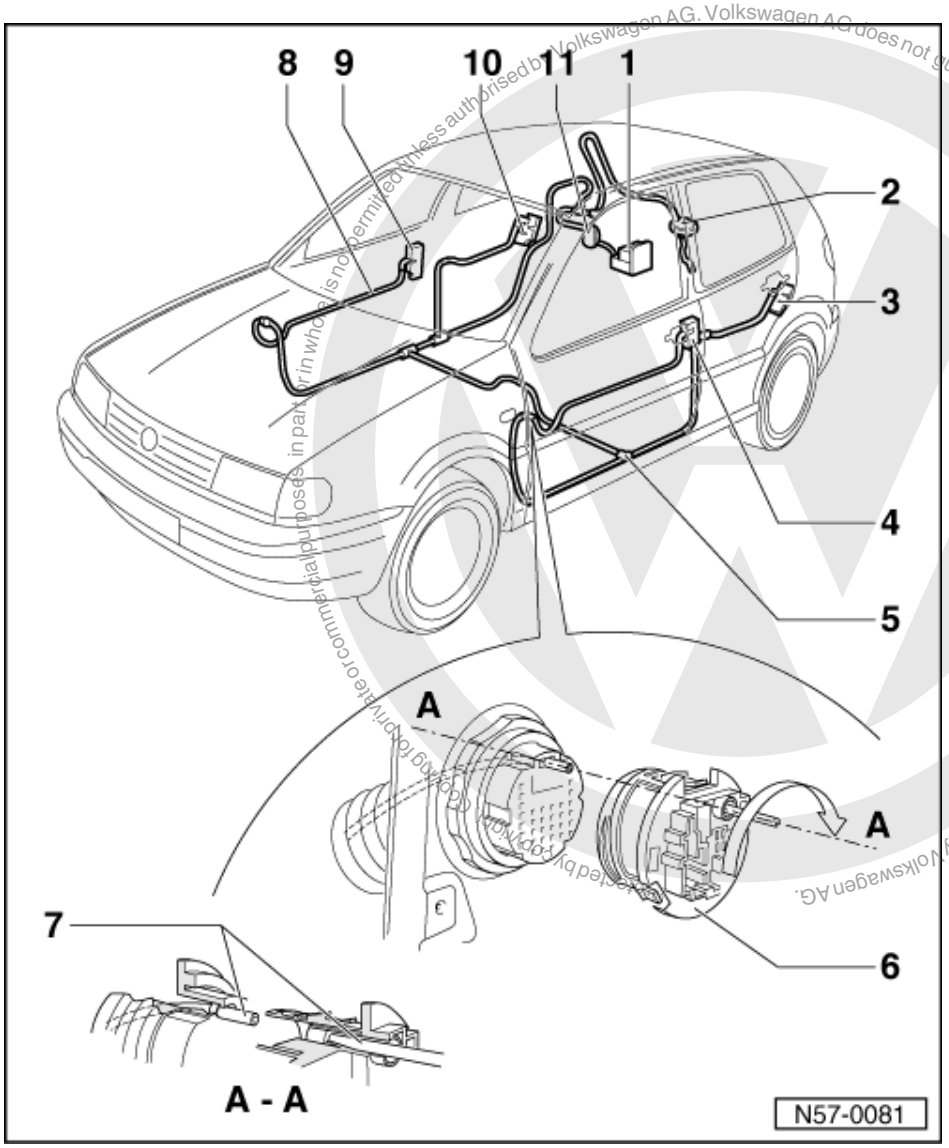

Copyrighted by Volkswagen AG. Volkswagen AG does not guarantee or accept any liability with respect to the correctness of information in this document. Copyright by Volkswagen AG. Copying for private or commercial purposes, in part or in whole, is not permitted unless authorised by Volkswagen AG.

satelettronica

2.2 - Assembly overview

The central locking from 10.99 ‣ is based on the Golf A4 convenience system. Further information can be found in Workshop Manual: Body self-diagnosis.

Note:

New coupling and junction piece for pipe connections => Page 68 .

1 Bi-pressure pump
- Removing and installing => Page 68

2 Boot lid/tailgate positioner

Protected by copyright. Copying for private or commercial purposes, in part or in whole, is not permitted unless authorised by Volkswagen AG. Volkswagen AG does not guarantee or accept any liability with respect to the correctness of information in this document. Copyright by Volkswagen AG.

- Removing and installing =>Page 72

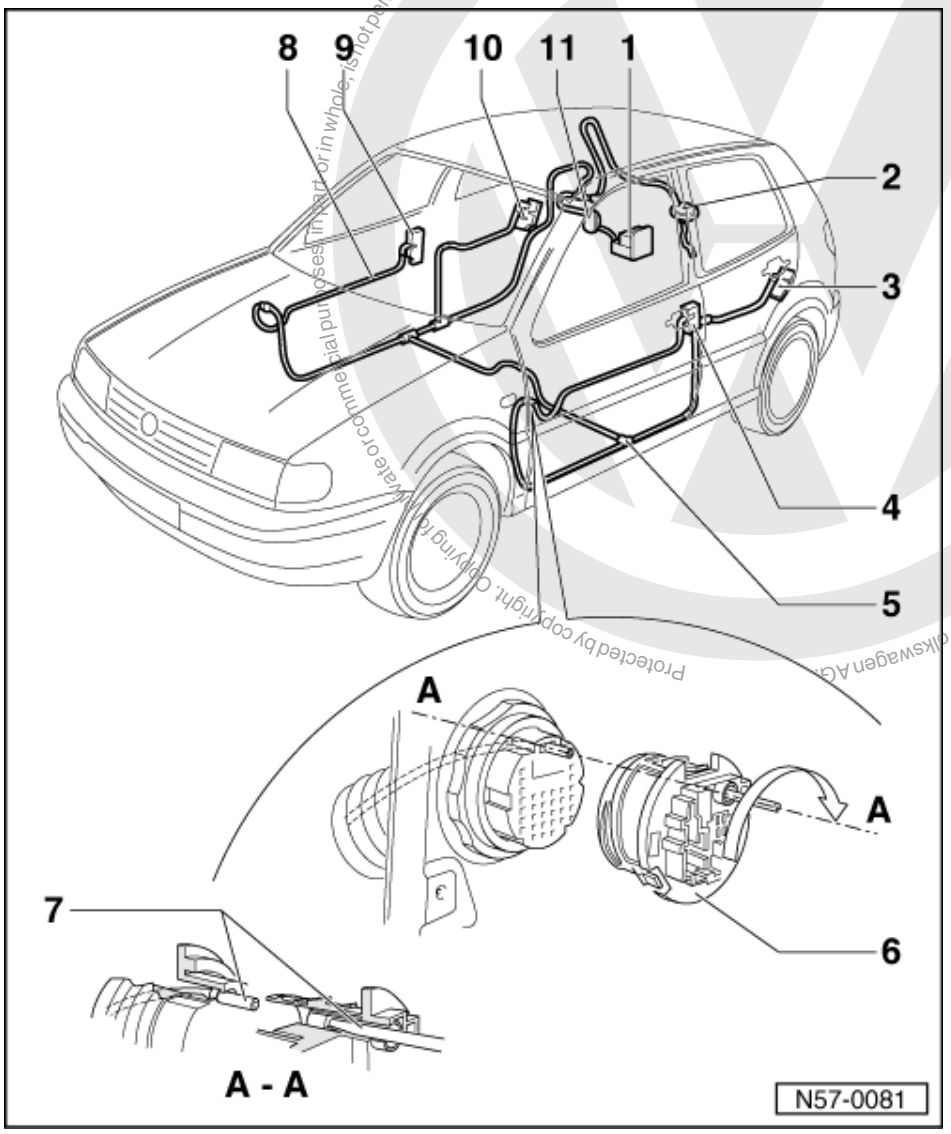

3 Rear door lock positioning element
- Removing and installing => Page 71

4 Front door lock positioning element
- Removing and installing => Page 69

5 T-piece
- Fitting location: B pillar/sill, covered by sill trim

6 Connector
- Location:
  A pillar = multi-pin connector (two and four door)
  B pillar = connector under bellows (lever apart with a 7 m open jaw spanner)

satelettronica

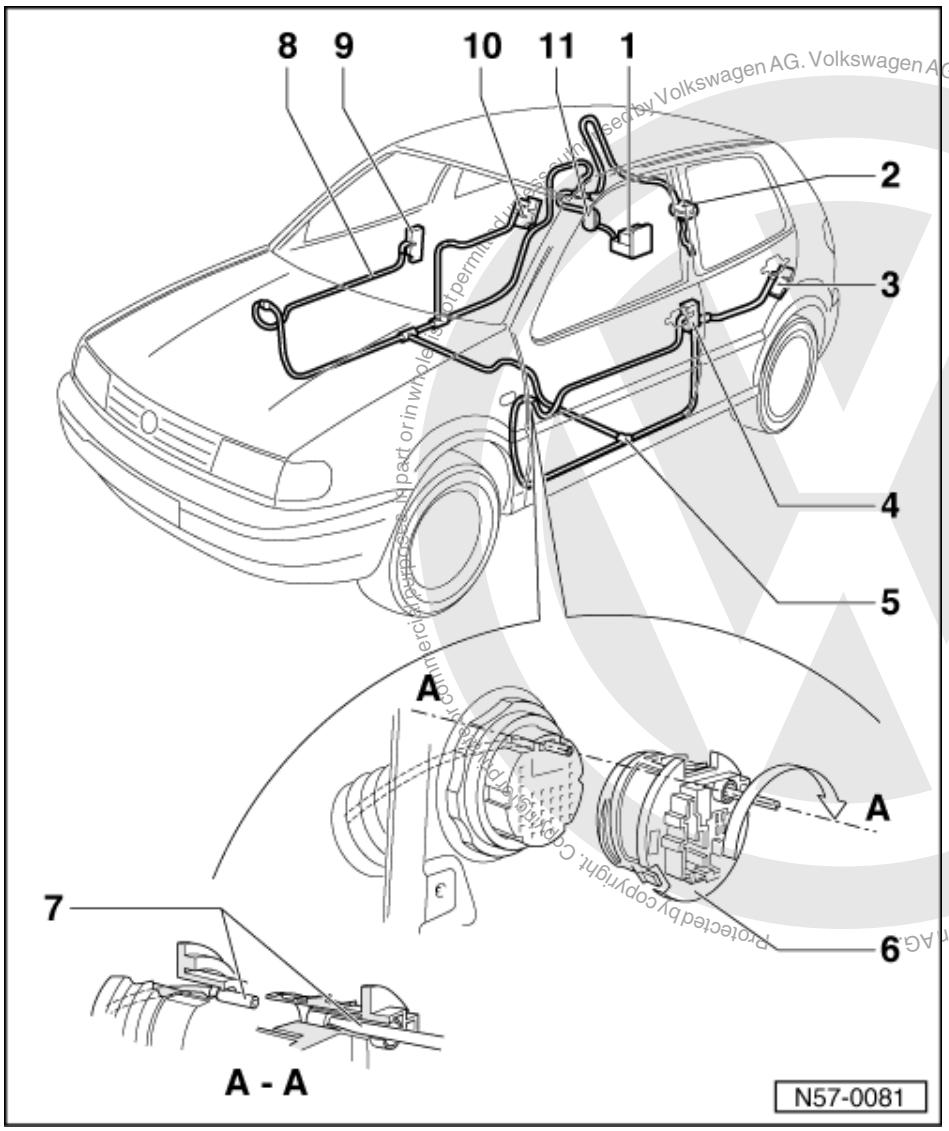

7 Pipe connector
- Engages in connectors

8 Pipe with coloured mark
- Pipes must be pushed onto the connector up to the coloured mark

9 Front door positioning element

10 Rear door positioning element

11 Fuel filler flap positioner
- To remove, the boot trim must be detached first of all up to wheel house
- Removing and installing => Page 69

Protected by copyright. Copyright by Volkswagen AG. Volkswagen AG does not guarantee or accept any liability with respect to the correctness of information in this document. Copyright by Volkswagen AG. Reproduction, in whole or in part, not permitted without the express consent of Volkswagen AG.
satelettronica

2.3 - New coupling and junction piece for pipe connector

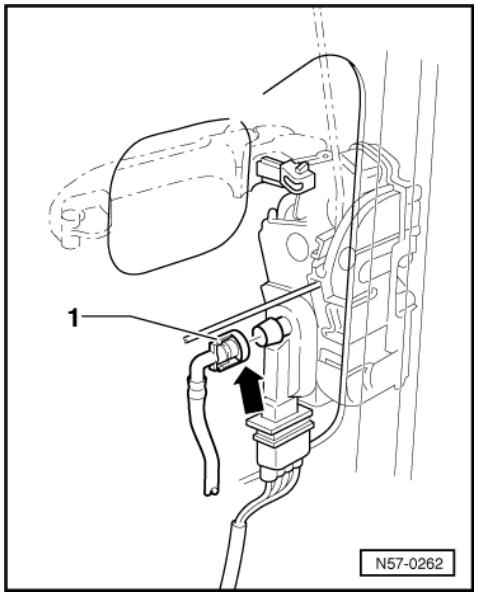

New couplings and junctions have gradually been introduced for actuators and the bi-pressure pump.

- -> Release coupling -1- by pressing forward ring -arrow- together. Check coupling is correctly engaged when fitting.

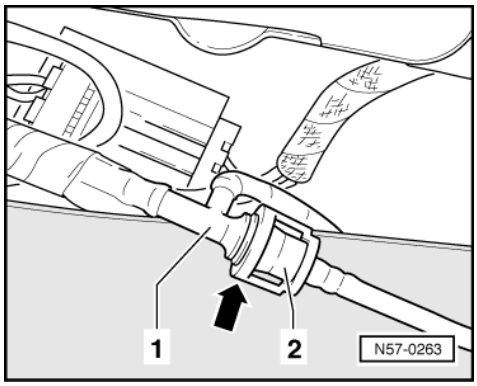

-> The junction piece -1- is also connected via these couplings.

- Release coupling -2- by pressing forward ring -arrow- together. Check coupling is correctly engaged when fitting.

2.4 - Removing and installing bi-pressure pump

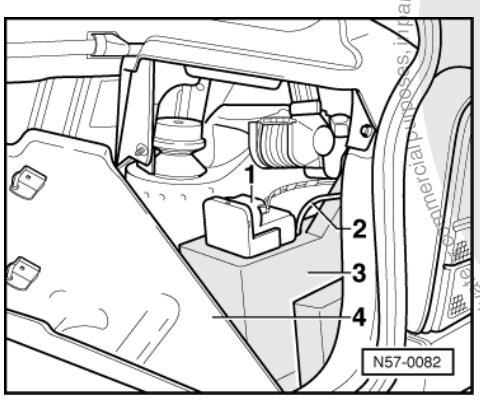

Protected by copyright. Copying for private or commercial purposes, in part or in whole, is not permitted unless authorised by Volkswagen AG. Volkswagen AG does not guarantee or accept any liability with respect to the correctness of information in this document. Copyright by Volkswagen AG.
satelettronica

- -> Open luggage compartment trim flap -4- on right-hand side.
- Take out bi-pressure pump -1- from insulation -3- upwards.
- Pull multi-pin connector -1- and pressure pipe -2- off bi-pressure pump. When reconnecting the multi-pin connector, check that it is properly locked in position.

Note:
Pipes must be pushed up to the coloured marking in the pipe connections.

2.5 - Removing and installing tank flap positioning element

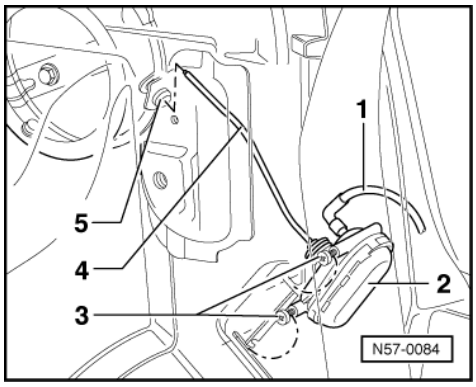

Luggage compartment trim released, bi-pressure pump and insulation removed.
- -> Remove cross-head screws -3-.
- Pull positioning element -2- with fitted locking rod out of fuel filler cap.
- Pull pressure line off at positioner.
- The rear light cluster must be removed to install the positioning element so that the locking rod -4- can be guided into the tank flap cap -5-.

Note:
Pipes must be pushed up to the coloured marking in the pipe connections.

2.6 - Removing and installing front door positioning element

Removing
Remove front door trim and partially pull off door insulation sheeting.

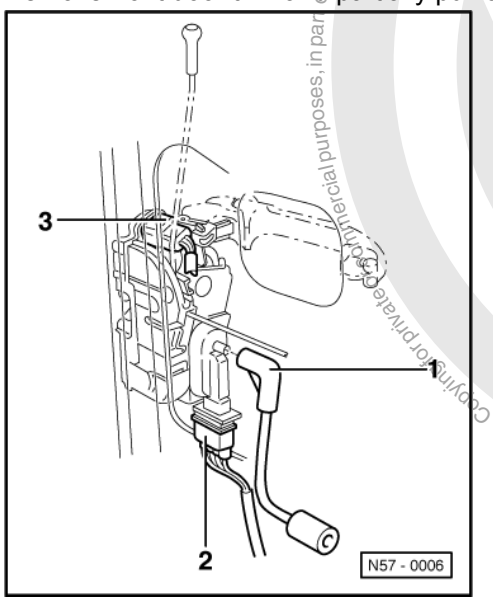

Protected by copyright. Copying for private or commercial purposes, in part or in whole, is not permitted unless authorised by Volkswagen AG. Volkswagen AG does not guarantee or accept any liability with respect to the correctness of information in this document. Copyright by Volkswagen AG.
satelettronica

=> General body repairs, interior; Repair group 70; Door trim; Removing and installing front door trim Door trim Removing and installing front door trim

1 - Angle piece (4-door), connecting hose (2-door).

- -> Pull pressure pipe -1- and multi-pin connectors -2- and -3- off positioning element.
- Remove door lock with positioning element => Page 50 .

Note:

Pipes must be pushed up to the coloured marking in the pipe connections.

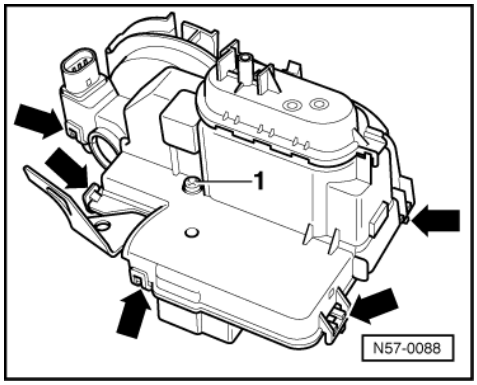

- -> Turn door lock rotary latch to "locked position".
- Pull stop buffer off for door window.
- Remove torx bolt (T15) -1-.
- Release positioning element -arrows- and remove from door lock.

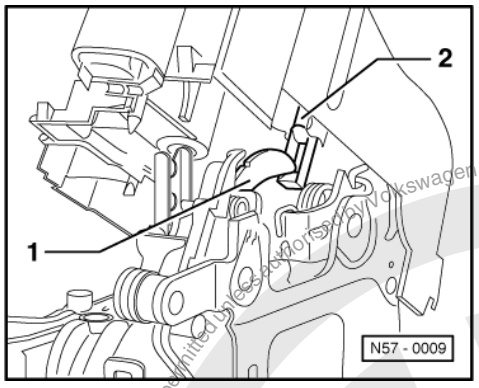

- -> The locking lever -1- slides out of the plunger -2- when removing the positioning element.

Installing

When installing the locking lever -1- must locate in the plunger -2- again.

Note:

If after replacing the positioning element the door lock does not function properly, renew the door lock complete with positioning element.

Protected by copyright. Copying for private or commercial purposes, in part or whole, is not permitted unless authorised by Volkswagen AG. Volkswagen AG does not guarantee or accept any liability with respect to the correctness of information in this document. Copyright by Volkswagen AG.
satelettronica

2.7 - Removing and installing rear door lock positioning element

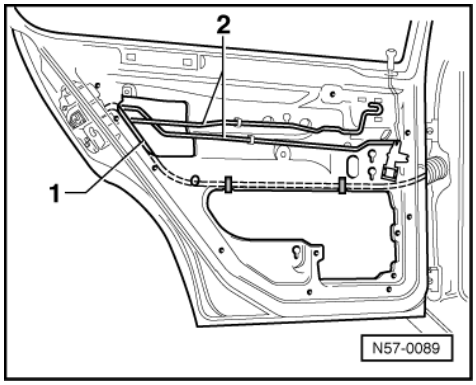

Removing

Remove rear door trim and partially pull off door insulation sheeting.

=> General body repairs, interior; Repair group 70; Door trims; Removing and installing rear door trim

- -> Pull pressure pipe -1- off positioning element. Unhook pull and locking rods -2-.

Note:

Pipes must be pushed up to the coloured marking in the pipe connections.

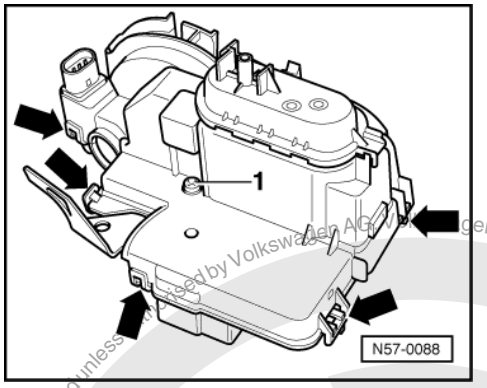

- Remove rear door lock with positioning element => Page 50 (front door lock).
- -> Turn door lock rotary latch to "locked position".
- Remove Torx bolt (T15) -1-.
- Release positioning element -arrows- and remove from door lock.

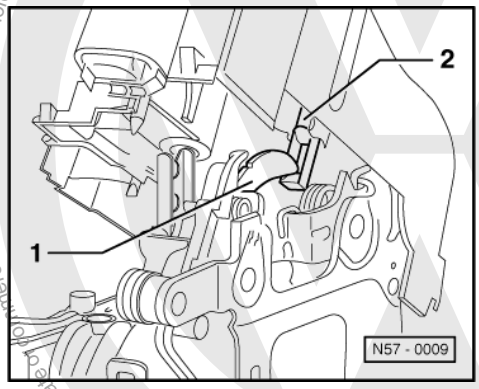

- -> The locking lever -1- slides out of the plunger -2- when the positioning element is removed.

Protected by copyright. Copying for private or commercial purposes, in part or in whole, is not permitted unless authorised by Volkswagen AG. Volkswagen AG does not guarantee or accept any liability with respect to the correctness of information in this document. Copyright by Volkswagen AG.
satelettronica

Installing

When installing the locking lever -1- must locate in the plunger -2- again.

Note:

If after replacing the positioning element the door lock does not function properly, renew the door lock complete with positioning element.

2.8 - Removing and installing boot lid/tailgate positioning element

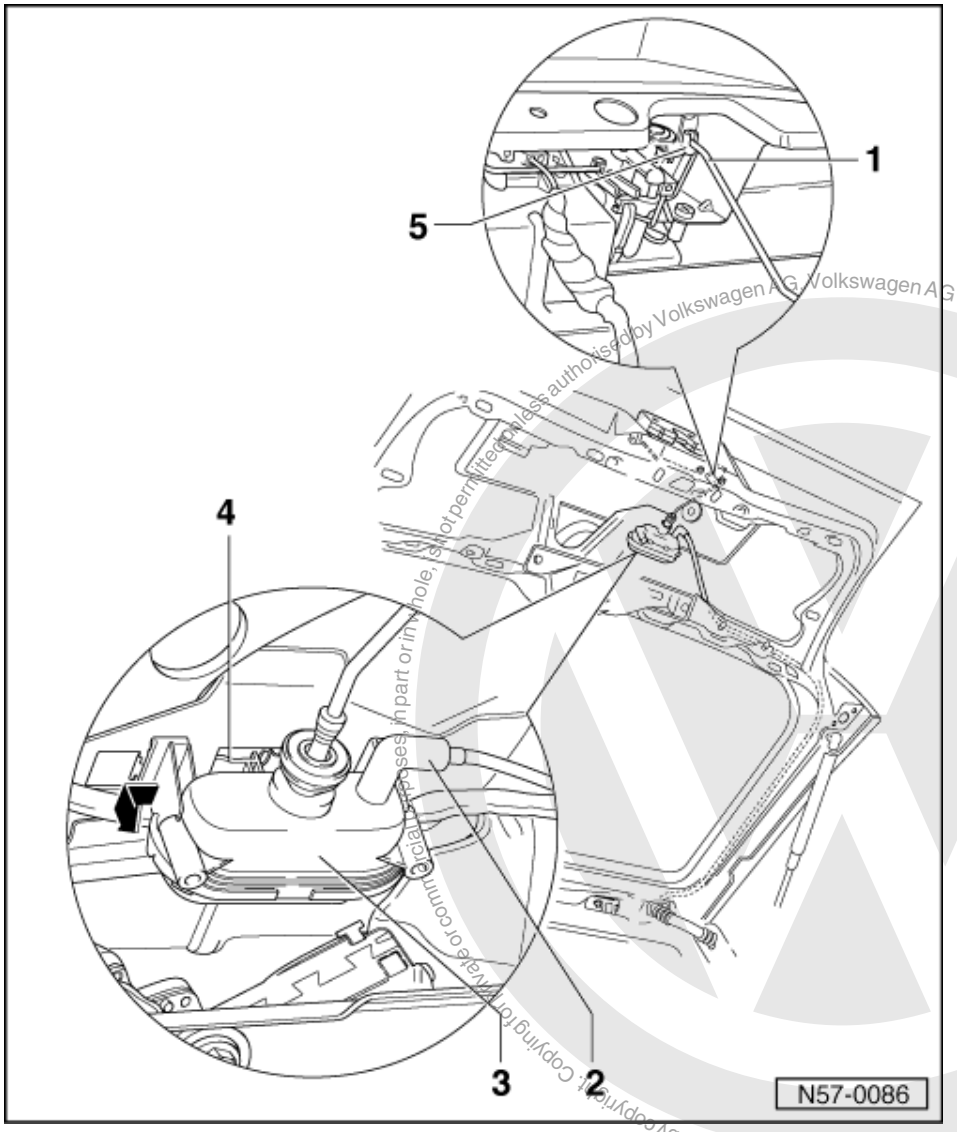

- Unclip boot lid/tailgate trim (hand grip is secured with a cross-head screw).
- Pull locking rod -1- out of relay lever -5- and pull pressure hose -2- off.
- Lift up locating lug -4- with a screwdriver and push positioning element -3- out of the locking mechanism in direction of arrow.
- When installing ensure that the locating lug has engaged correctly.

2.9 - Activating individual door opening of central locking system

- By opening the circuit between earth (terminal 31) and connector pin No. 8 of the bi-pressure pump, individual door opening can be activated

Copyright by Volkswagen AG. Volkswagen AG does not guarantee or accept any liability with respect to the correctness of information in this document. Copyright by Volkswagen AG. Copying for private or commercial purposes, in part or in whole, is not permitted unless authorised by Volkswagen AG.
satelettronica

Notes:

- Individual door opening is only possible mechanically using the key. When using the radio remote control, all doors are opened.
- By reconnecting the wire, all-door opening can be reactivated.

2.10 - Functional check of central locking

Note:

If system is operating properly, all locks must lock after about 2 seconds. If bi-pressure pump runs for longer than 5 seconds, the system is leaking.

During the first opening operation only that particular door is unlocked. If a 2nd unlocking operation is undertaken within 5 seconds then the complete central locking is unlocked.

Requirements for operational check:

- Doors, tailgate/boot lid and tank flap closed.
- Door windows fully open.

Checking locking

- Press down locking knob on driver's door.

- All the locking knobs must move downwards. All doors and tailgate/boot lid are locked and the fuel tank flap (Polo Classic and Polo Estate only) is secured.

- Check that all doors, tailgate/boot lid and fuel tank flap (Polo Classic and Polo Estate only) are locked.

Note:

Central locking and unlocking is possible by operating the locking knob of the driver's/front passenger's door.

2.11 - Functional check of central locking with radio remote control

On vehicles with a radio remote control system, the door locks can be locked or unlocked without directly operating the door locks. The anti-theft alarm system can also be activated or deactivated using the radio remote control if the system is fitted. All additional functions as opposed to a central locking system without radio remote control are described in the following.

The radio sender with batteries is located in the vehicle key grip. The radio receiver is located under the dash panel in the interior of the vehicle.

The effective range of the radio remote control is 6 ...15 m. The range is dependent upon various factors (atmospheric conditions, metallic materials in the vicinity of the vehicle, condition of the battery in the key).

If the batteries are considerably discharged, only the unlocking functions will be carried out. The vehicle can no longer be locked using the radio remote control and the respective key can no longer be synchronized.

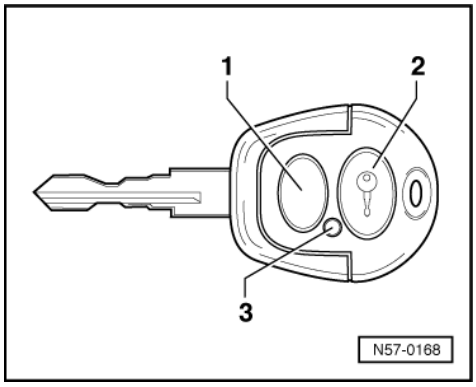

Protected by copyright. Copying for private or commercial purposes, in part or in whole, is not permitted unless authorised by Volkswagen AG. Volkswagen AG does not guarantee or accept any liability with respect to the correctness of information in this document. Copyright by Volkswagen AG.
satelettronica

- -> To unlock vehicle, point the key from within the effective range at the vehicle and briefly press the "open" button -1-. The unlocking of the vehicle and the deactivation of the anti-theft alarm system, if applicable, is identical by the hazard warning light system lighting up for approx. 0.5 seconds. To lock the vehicle, briefly press the "close" button -2-.

If the "lock" button -2- is depressed for at least one second the anti-theft alarm system is simultaneously activated.

The locking of the vehicle and the activation of the anti-theft alarm system is indicated by the hazard warning system switching on for approx. 2 seconds.

When the close or open buttons are pressed the warning lamp -3- will flash in the key. If this lamp does not flash, the battery in the key might be discharged. Renew battery if necessary.

It is not necessary to resynchronise the key after changing a battery.

The system code is changed after each unlocking or locking operation with the radio remote control.

If the sender buttons are operated for more than 50 times outside of the effective range the system reacts after first pressing the respective button -1- or -2- twice quickly.

2.12 - Matching ignition keys to radio wave remote control

=> Body self-diagnosis; Repair group 01; Convenience system self-diagnosis 10.99 ▸; Matching ignition keys to radio remote control. Convenience system self-diagnosis 10.99 ▸ Matching ignition keys to radio remote control.

=>

2.13 - Removing and installing batteries for the main key with radio wave remote control

=> Body self-diagnosis; Repair group 01; Convenience system 10.99 ▸self-diagnosis; Removing and installing batteries from main key with radio remote control. Convenience system 10.99 ▸self-diagnosis Removing and installing batteries from main key with radio remote control.

Protected by copyright. Copying for private or commercial purposes, in part or in whole, is not permitted unless authorised by Volkswagen AG. Volkswagen AG does not guarantee or accept any liability with respect to the correctness of information in this document. Copyright by Volkswagen AG.
satelettronica

58 - Rear doors/Door components

1 - Rear door

1.1 - Rear door

1.2 - Tools

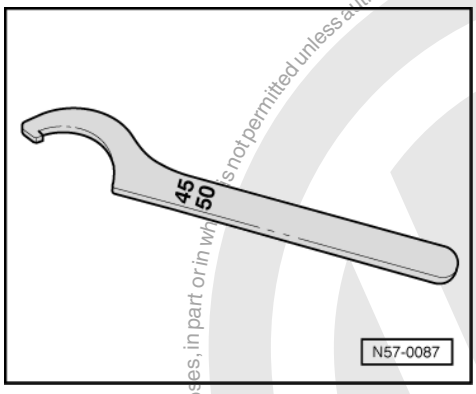

Special tools, workshop equipment, testers, measuring instruments and auxiliary items required

- Commercially available 'C' spanner with lug
  DIN 1810/A, size 45/50 mm

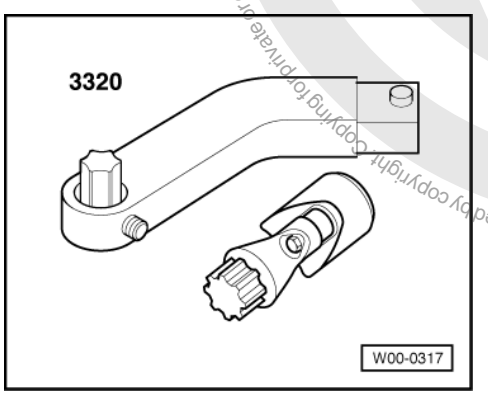

- Adjustment wrench 3320 combined with Torx bit for loosening securing screws on door hinge, B-pillar.

Protected by copyright. Copying for private or commercial purposes, in part or in whole, is not permitted unless authorised by Volkswagen AG. Volkswagen AG does not guarantee or accept any liability with respect to the correctness of information in this document. Copyright by Volkswagen AG.
satelettronica

1.3 - Assembly overview

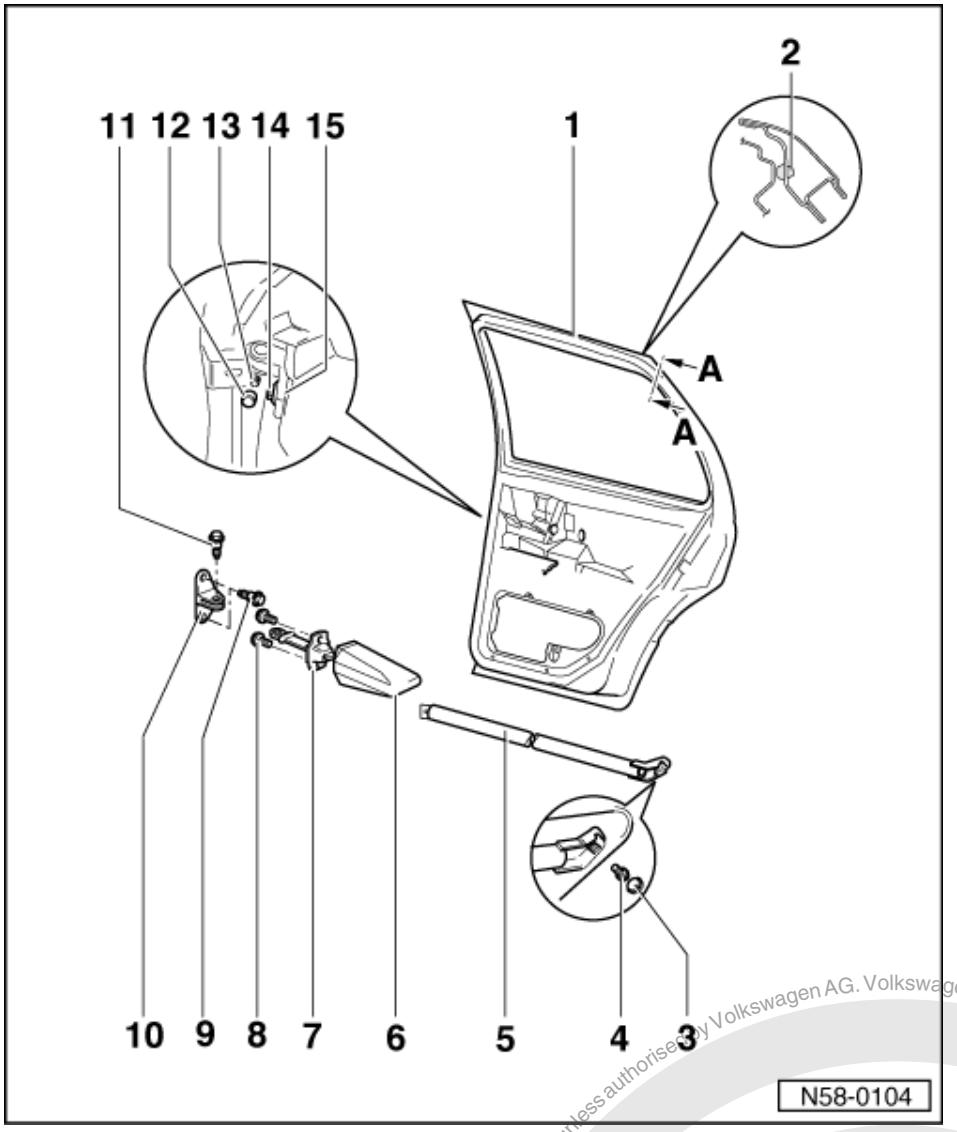

Notes:

- The side impact member cannot be removed from the door.
- Always replace door hinge screws after loosening them.

1 Door
- Adjustment on the door or on the B pillar: within the elongated holes
- Adjusting =>Page 84
- Removing and installing => Page 42

2 Buffer

3 Cover

4 Hexagon head bolt
- 25 Nm

Protected by copyright. Copying for private or commercial purposes, in part or in whole, is not permitted unless authorised by Volkswagen AG. Volkswagen AG does not guarantee or accept any liability with respect to the correctness of information in this document. Copyright by Volkswagen AG.
satelettronica

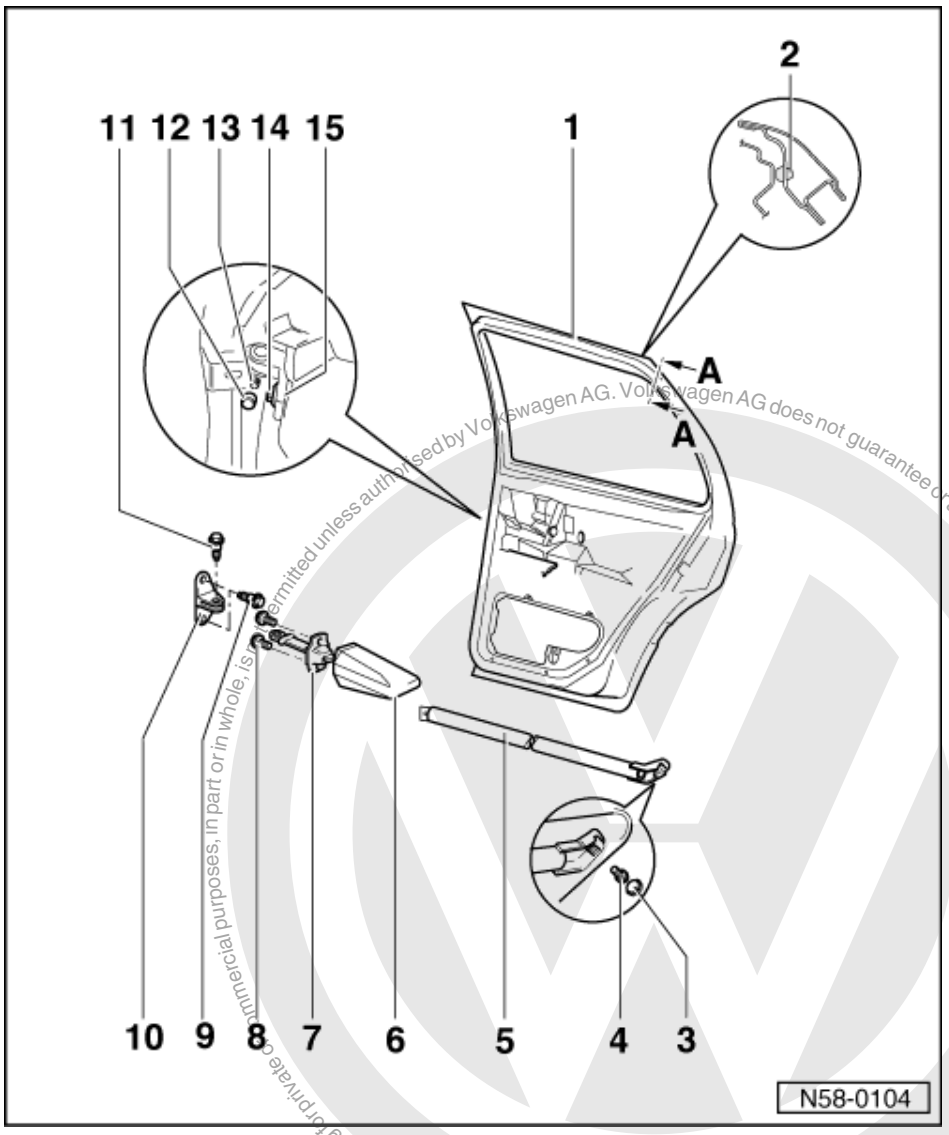

5 Side impact bar
- Cannot be removed

6 Door check strap sleeve

7 Door check strap

8 Hexagon bolt
- Qty. 2
- 7.5 Nm

9 Hexagon head screw
- Qty. 2
- 8 Nm + turn 90° further

10 Bracket

11 Threaded pin
- 7.5 Nm

12 Cover cap

13 Grub screw
- 23 Nm

Protected by copyright. Copyright by Volkswagen AG.
Copying for private or commercial purposes, in part or in whole, is not permitted unless authorised by Volkswagen AG. Volkswagen AG does not guarantee or accept any liability with respect to the correctness of information in this document.
satelettronica

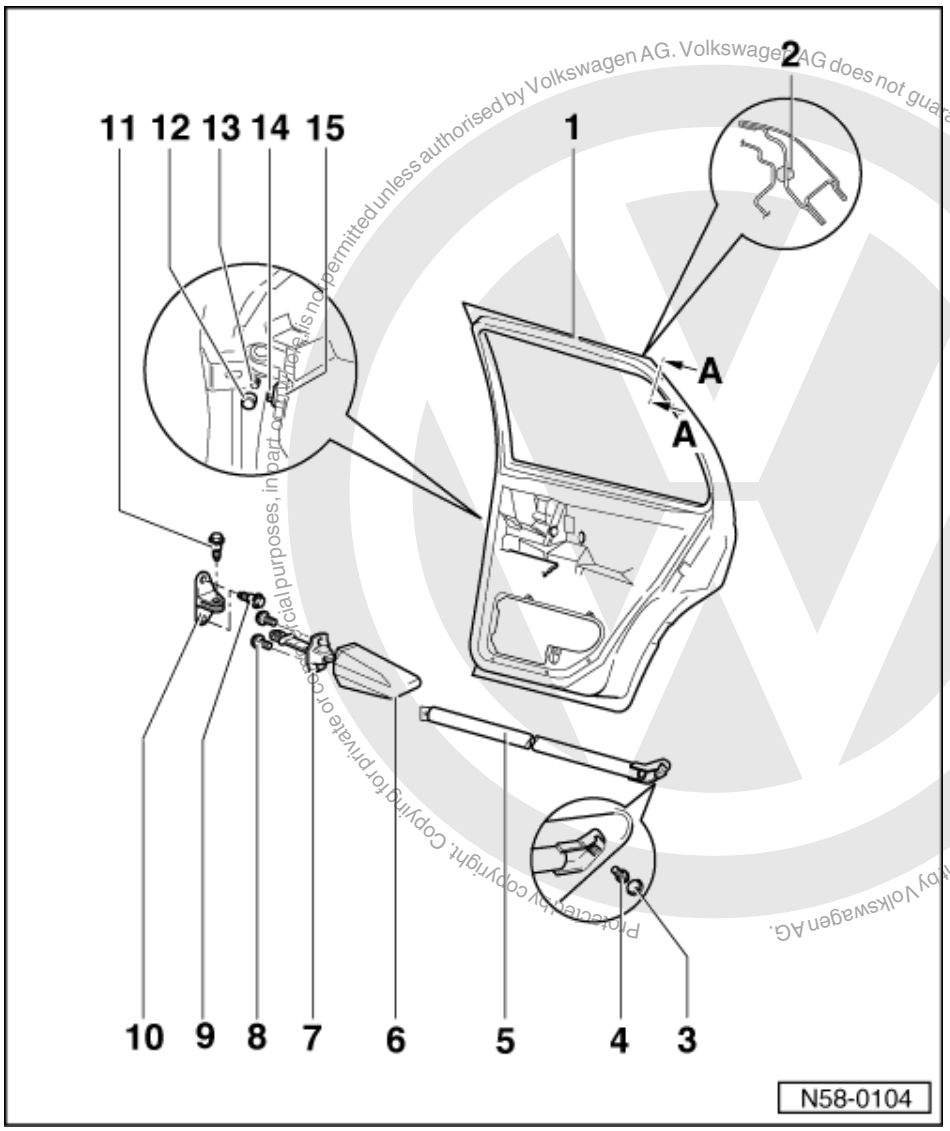

Copyright by Volkswagen AG. Volkswagen AG does not guarantee or accept any liability with respect to the correctness of information in this document. Copyright by Volkswagen AG. Protected by copyright. Copying for private or commercial purposes, in part or in whole, is not permitted unless authorised by Volkswagen AG.

satelettronica

14 Torx bolt T 45

- 36 Nm

15 Door hinge

- Bolted to the door and B-pillar (hinge pin inserted into box section and secured with grub screw; Brussels production only).
- 36 Nm

Protected by copyright. Copying for private or commercial purposes, in part or in whole, is not permitted unless authorised by Volkswagen AG. Volkswagen AG does not guarantee or accept any liability with respect to the correctness of information in this document. Copyright by Volkswagen AG.

1.4 - Removing and installing door

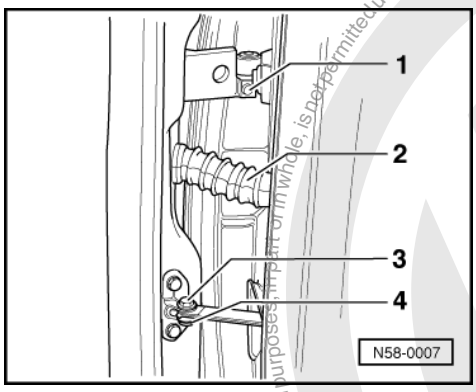

- -> Lever cover cap -1- off the hinges with a screwdriver.
- Remove grub screw from upper and lower hinges with 6 mm Allen key V.A.G 1953.
- Grub screw tightening torque = 23 Nm.

Vehicles with central locking

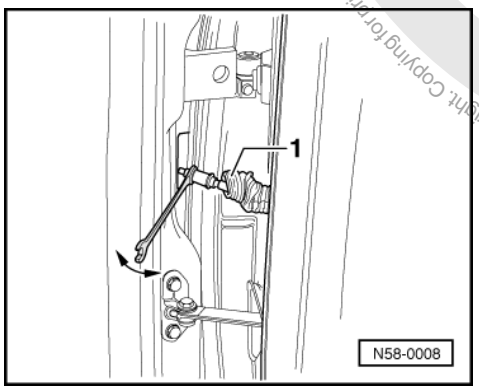

- -> Pull bellows -1- out of B pillar.
- Push pipe connector for vacuum pipe apart with 7 mm open jaw spanner.

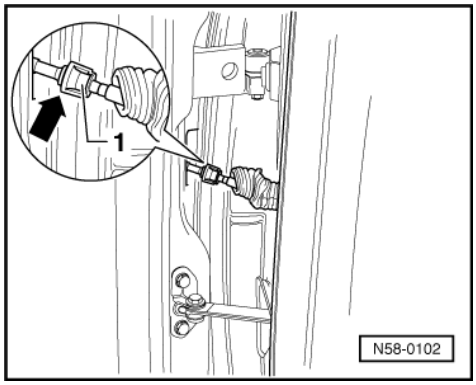

- New couplings on pipes have been gradually introduced in series production.
- -> Release coupling -1- by pressing forward ring -arrow- together. Check coupling is correctly engaged when fitting.

satelettronica

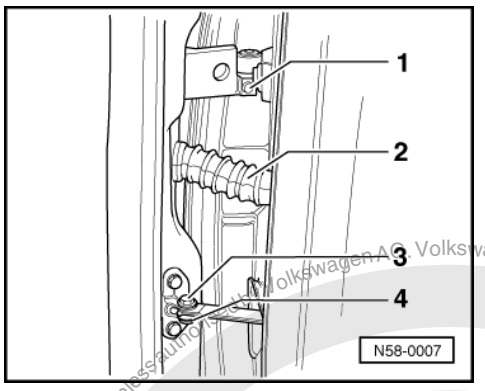

Continuation all vehicles

- -> Remove pin -3-, nut -4- is captive welded.
- Lift door upwards out of hinge brackets.

1.5 - Rear door 09.96 >

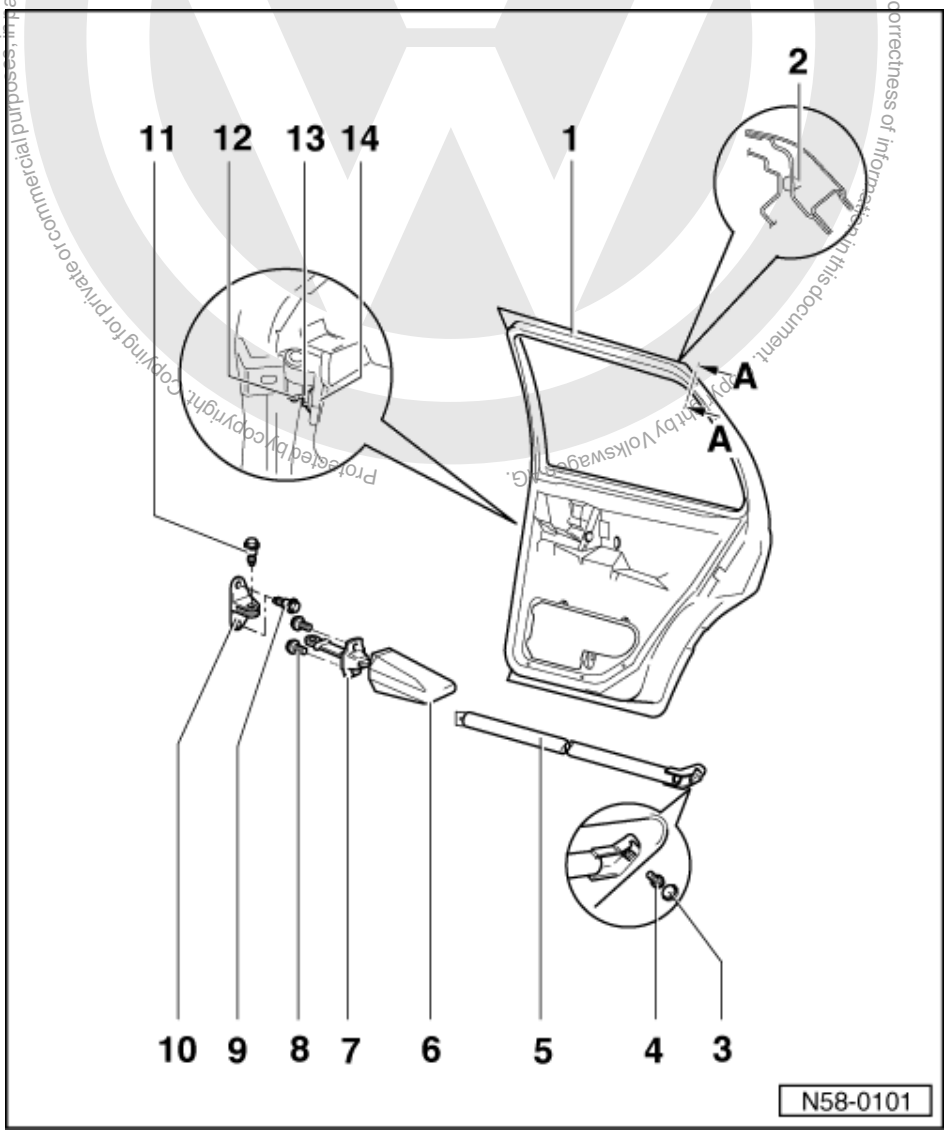

Volkswagen AG. Volkswagen AG does not guarantee or accept any liability with respect to the correctness of information in this document. Copyright by Volkswagen AG. Protected by copyright. Copying for private or commercial purposes, in part or in whole, is not permitted unless authorised by Volkswagen AG.
satelettronica

Notes:
- The side impact member cannot be removed from the door.
- Always replace door hinge screws after loosening them.

1 Door
- Adjustment on the door or on the B pillar: within the elongated holes
- Adjusting =>Page 84
- Removing and installing => Page 83

2 Buffer

3 Cover

4 Hexagon head bolt
- 25 Nm

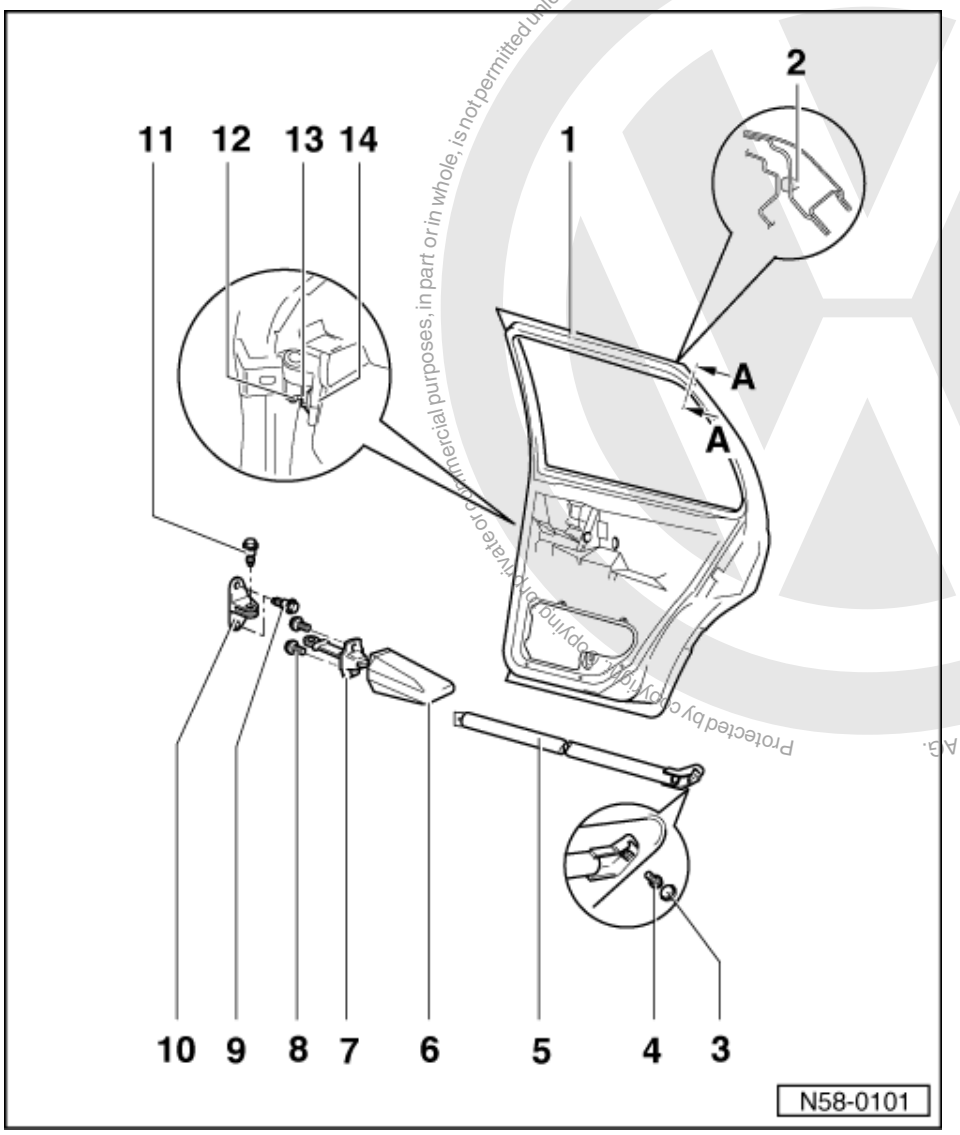

5 Side impact bar
- Cannot be removed

6 Door check strap sleeve

7 Door check strap

8 Hexagon bolt
- Qty. 2
- 7.5 Nm

9 Hexagon head screw
- Qty. 2

Protected by copyright. Copying for private or commercial purposes, in part or in whole, is not permitted unless authorised by Volkswagen AG. Volkswagen AG does not guarantee or accept any liability with respect to the correctness of information in this document. Copyright by Volkswagen AG.
satelettronica

- 8 Nm + turn 90° further

10 Bracket

11 Threaded pin

- 7.5 Nm

12 Conical nut

- 30 Nm

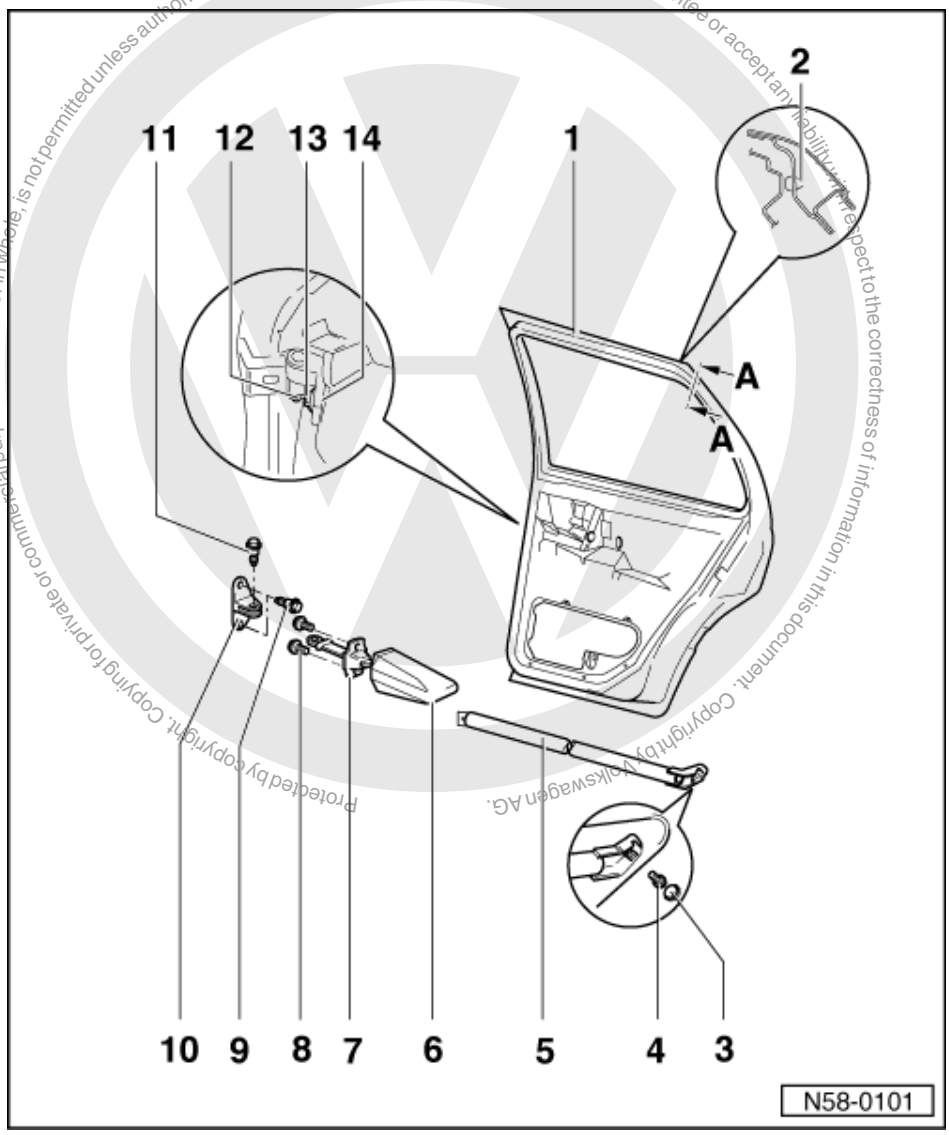

13 Torx bolt T 45

- 36 Nm

14 Door hinge

- Bolted to door and A-pillar with Torx bolt T 45. Hinge pin inserted into box section and secured by a grub screw

Protected by copyright. Copying for private or commercial purposes, in part or in whole, is not permitted unless authorised by Volkswagen AG. Volkswagen AG does not guarantee or accept any liability with respect to the correctness of information in this document. Copyright by Volkswagen AG.

satelettronica

1.6 - Removing and installing rear door 09.96 >

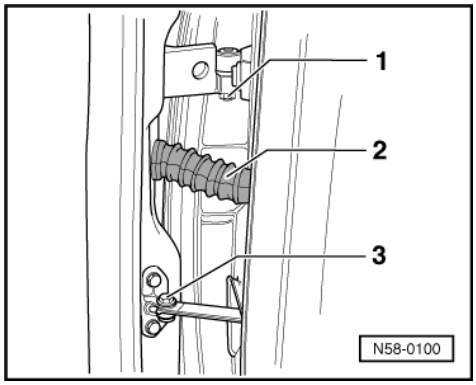

- -> Remove threaded pin -3- (7.5 Nm).
- Pull bellows -2- from B-pillar (only vehicles with central locking).

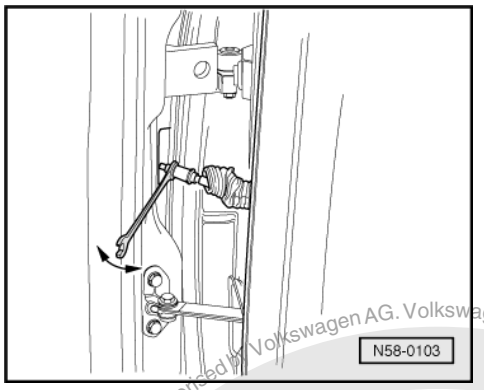

Vehicles with central locking

- -> Push pipe connector for vacuum pipe apart with 7 mm open jaw spanner.

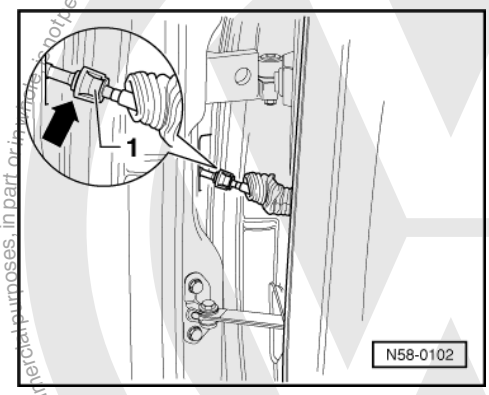

- New couplings on pipes have been gradually introduced in series production.
- -> Release coupling -1- by pressing forward ring -arrow- together. Check coupling is correctly engaged when fitting.

Protected by copyright. Copying for private or commercial purposes, in part or in whole, is not permitted unless authorised by Volkswagen AG. Volkswagen AG does not guarantee or accept any liability with respect to the correctness of information in this document. Copyright by Volkswagen AG.
satelettronica

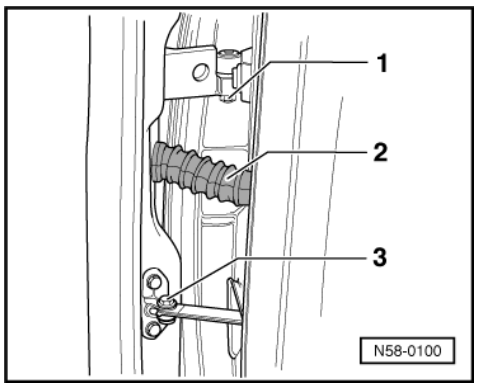

Continuation all vehicles

- -> Remove conical nut -1- from upper and lower hinge pins.
- Conical nut tightening torque = 30 Nm.
- Lift door upwards out of hinge brackets.

1.7 - Adjusting door

To ensure a correct door adjustment the door hinges on the pillar must be loosened. Other measures such as raising the door upwards have no effect. Overpressuring thereafter will again cause the door to sack.

Adjustment wrench 3320 combined with Torx bit T45 for loosening securing screws on door hinge, B-pillar.

Adjusting

- The doors are correctly adjusted if the clearance to the door opening when closed is even all round, does not project too much to the inside or outside and the contours align.

Loosen door hinges at the B pillar: To do this the lower B pillar trim and the belt inertia reel must be removed.

Note:

Observe the safety regulations for seat belts with belt tensioner on Page 69-1.

=> General body repairs, interior; Repair group 69 seat belts, safety regulations for belt tensioner

Protected by copyright. Copying for private or commercial purposes, in part or in whole, is not permitted unless authorised by Volkswagen AG. Volkswagen AG does not guarantee or accept any liability with respect to the correctness of information in this document. Copyright by Volkswagen AG.
satelettronica

1.8 - Door lock - Assembly overview

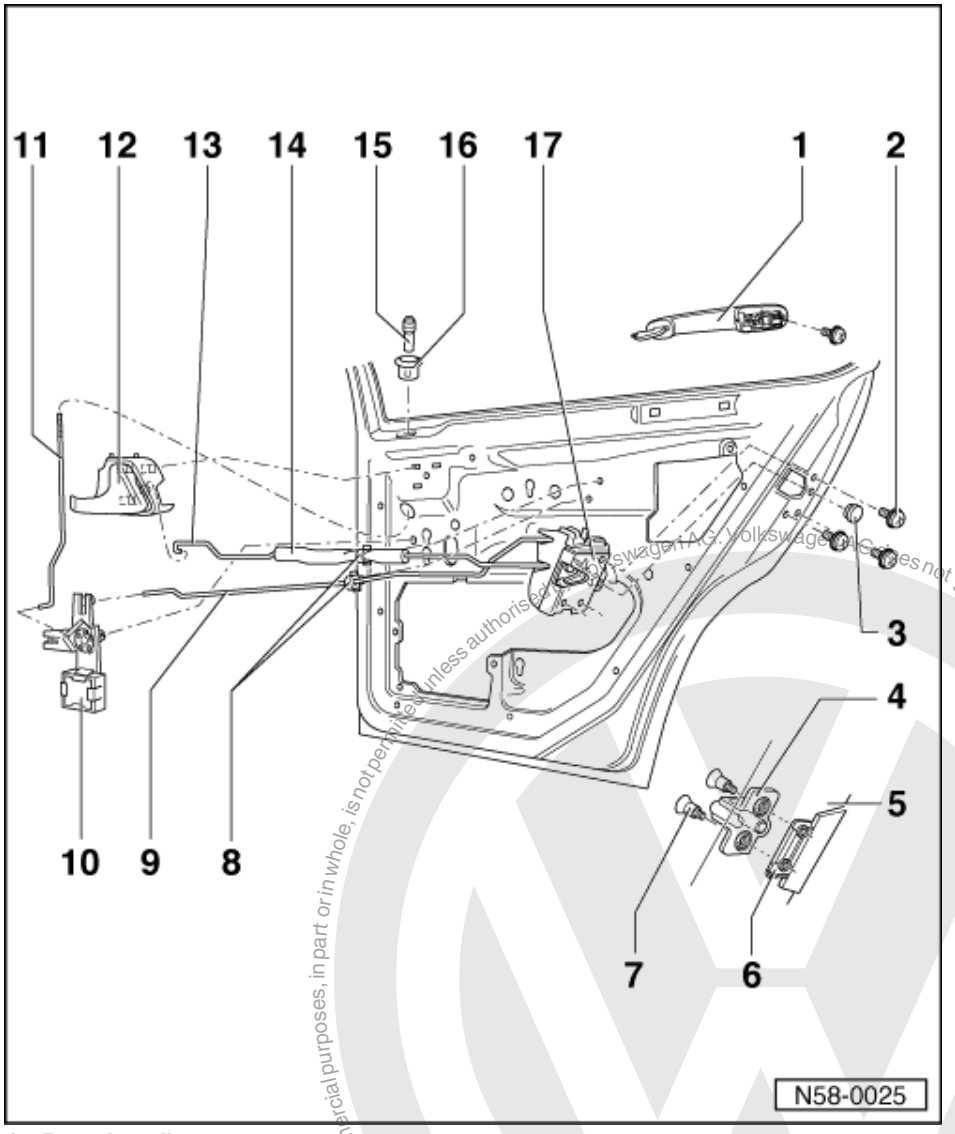

1 Door handle
- Removing and installing => Page 90
- Lubricate with G 000 400 prior to installation

2 Torx screw T 30
- 8 Nm

3 Cover cap

4 Striker pin

5 C pillar

6 Threaded plate

7 Torx bolt T 40
- 20 Nm

8 Clip

Protected by copyright. Copying for private or commercial purposes, in part or in whole, is not permitted unless authorised by Volkswagen AG. Volkswagen AG does not guarantee or accept any liability with respect to the correctness of information in this document. Copyright by Volkswagen AG.
satelettronica

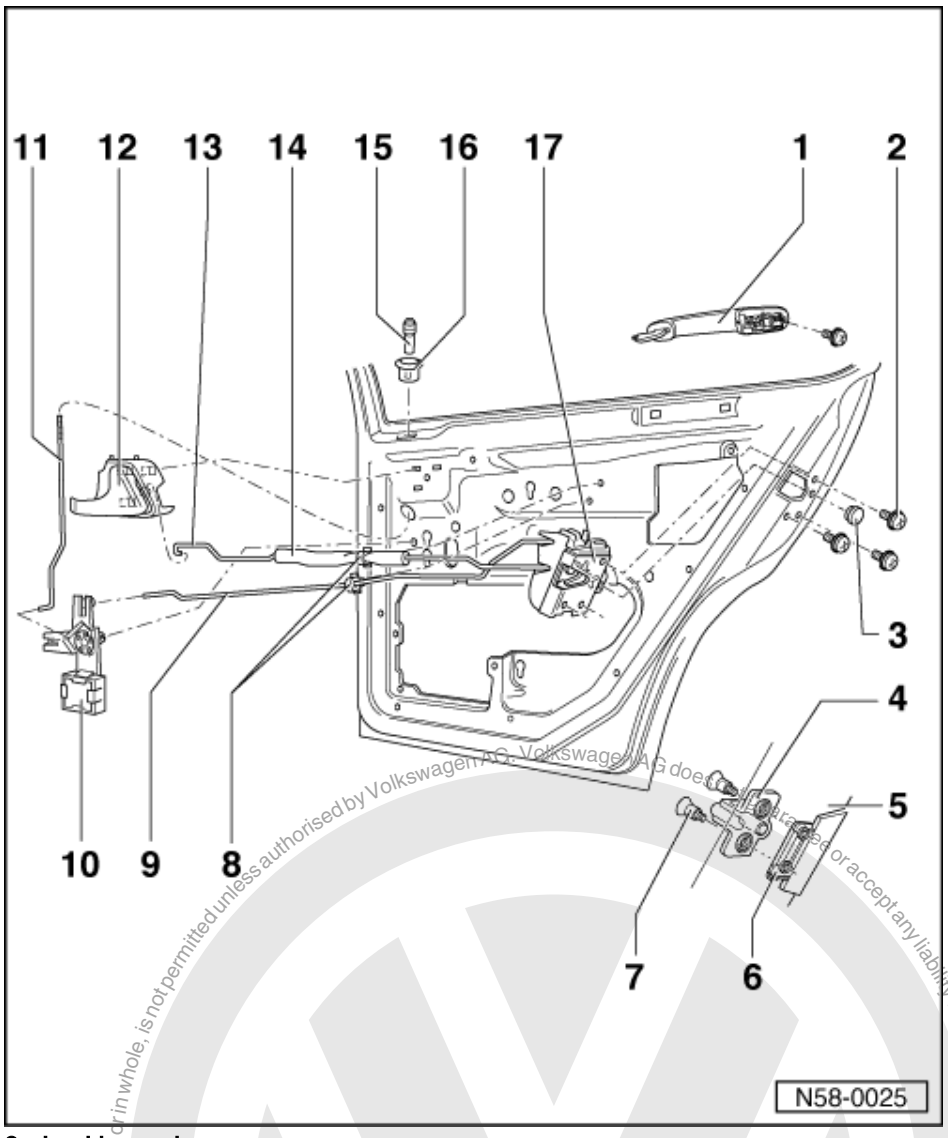

9 Locking rod
10 Angled lever
11 Locking rod
12 Interior release handle
- Removing =>Page 92

13 Pull rod
14 Foam rubber tube
15 Locking knob
- Screwed on

16 Rosette
17 Door lock
- Removing and installing => Page 50
- Door window must be closed when removing and installing

Protected by copyright. Copying for private or commercial purposes, in part or in whole, is not permitted unless authorised by Volkswagen AG. Volkswagen AG does not guarantee or accept any liability with respect to the correctness of information in this document. Copyright by Volkswagen AG.

1.9 - Removing and installing door lock

Door window must be closed.

satelettronica

- Remove door handle => Page 90
- Remove door trim.

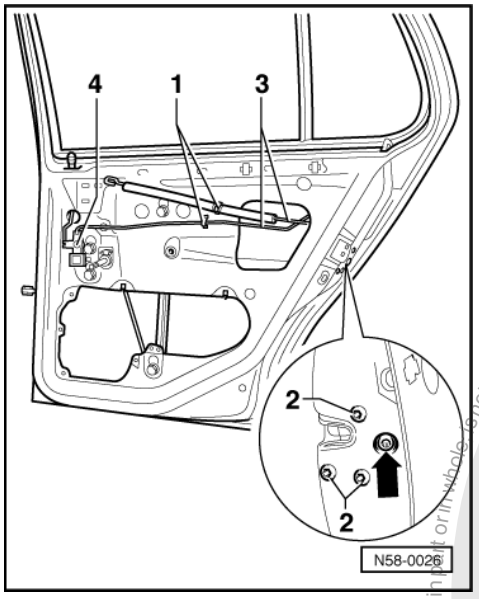

=> General body repairs, interior; Repair group 70; Door trims; Removing and installing rear door trim

- Carefully pull off door insulation film.
- -> Remove T 25 Torx bolts -2-
  Tightening torque: 8 Nm.
- Knock out spreader pin for clip on angled lever -4- to rear. Remove spreader pin without fail from the door (rattling noises).
- Unclip rod clips -1-, lift door lock out of installation opening and unhook pull rod and locking rod -3-.
- On vehicles with central locking pull off pressure pipe.

Installing:

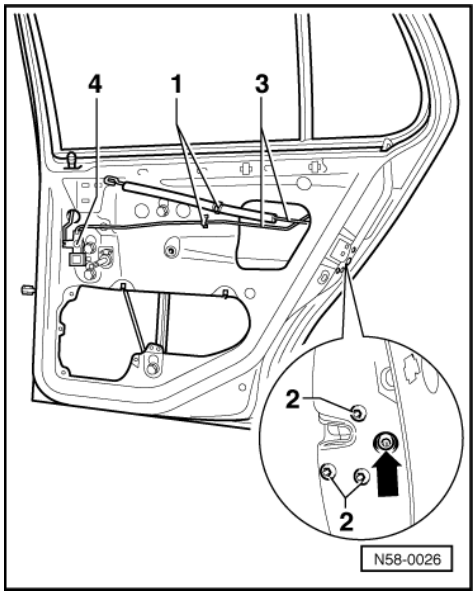

- -> Loosen tolerance screw -arrow- prior to installing door lock.

Left-hand lock - right-hand thread
Right-hand lock - left-hand thread

Tighten tolerance screw (Torx T 20)

Protected by copyright. Copying for private or commercial purposes, in part or in whole, is not permitted unless authorised by Volkswagen AG. Volkswagen AG does not guarantee or accept any liability with respect to the correctness of information in this document. Copyright by Volkswagen AG.
satelettronica

Tightening torque = 3 Nm.

Do not move tolerance screw sideways when tightening (e.g. by supporting the key on edge of hole). The door handle must be pushed onto door outer panel.

Tightening the tolerance screw also takes care of the adjustment.

1.10 - Removing inner release handle

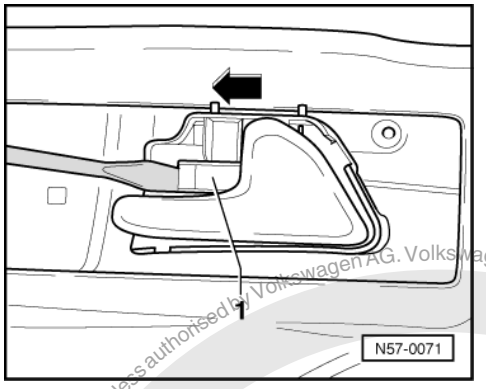

- -> Press securing clip -1- out of hole in door inner panel.
- Press inner release handle in forwards direction -arrow- out of the securing holes.

Protected by copyright. Copying for private or commercial purposes, in part or in whole, is not permitted unless authorised by Volkswagen AG. Volkswagen AG does not guarantee or accept any liability with respect to the correctness of information in this document. Copyright by Volkswagen AG.
satelettronica

1.11 - Door handle - Assembly overview

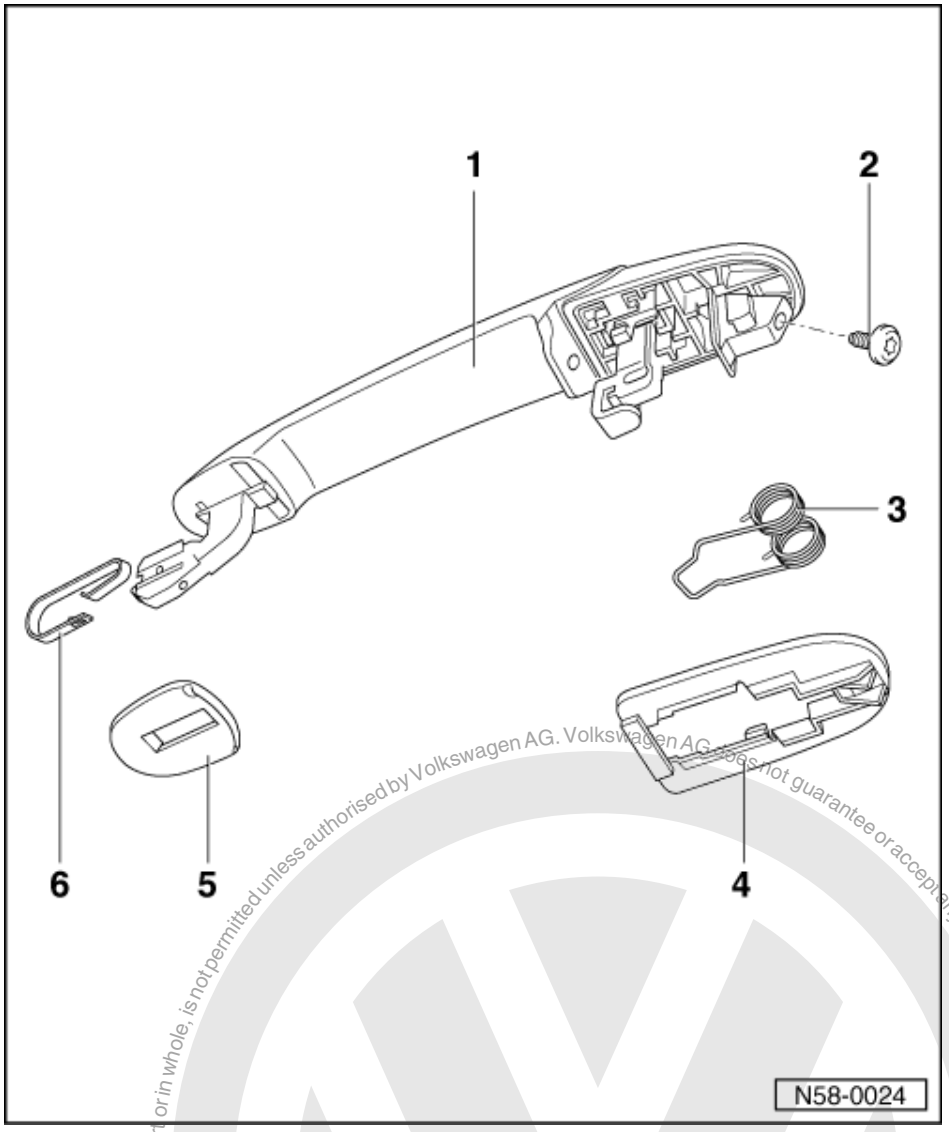

1 Door handle
- Removing and installing => Page 90 .

2 Torx screw T 30
- 8 Nm

3 Spring
4 Backing
5 Backing
6 Leaf spring

Protected by copyright. Copying for private or commercial purposes, in part or in whole, is not permitted unless authorised by Volkswagen AG. Volkswagen AG does not guarantee or accept any liability with respect to the correctness of information in this document. Copyright by Volkswagen AG.
satelettronica

1.12 - Removing and installing door handle

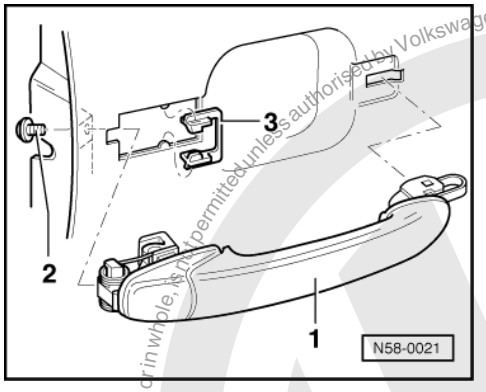

Removing

- -> Remove Torx screw -2-.
- Slide door handle -1- forwards, swing out downwards and remove from door.
- Check clip -3- for damage and renew if necessary.

Installing:

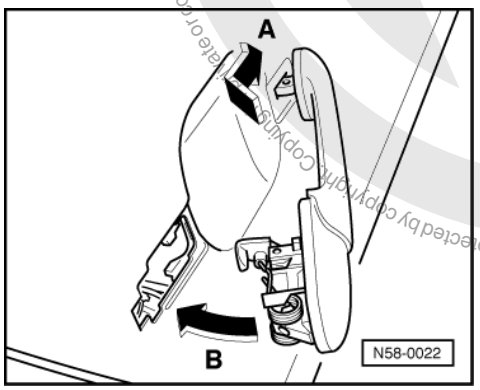

- Loosen door lock tolerance screws before installing the door handle.
- -> Insert door handle in door and slide forwards -arrow A- and swing into door -arrow B-.

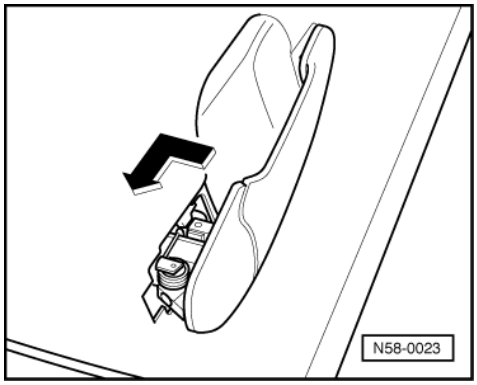

- -> Again push door handle forwards, press onto door outer panel and slide fully to rear.
- Screw in Torx screw.
  Tightening torque: 8 Nm.

Proceed as follows if the door handle jams:

Protected by copyright. Copyright by Volkswagen AG. Volkswagen AG does not guarantee or accept any liability with respect to the correctness of information in this document. Copyright by Volkswagen AG. Reproduction or commercial use is not permitted unless authorised by Volkswagen AG.
satelettronica

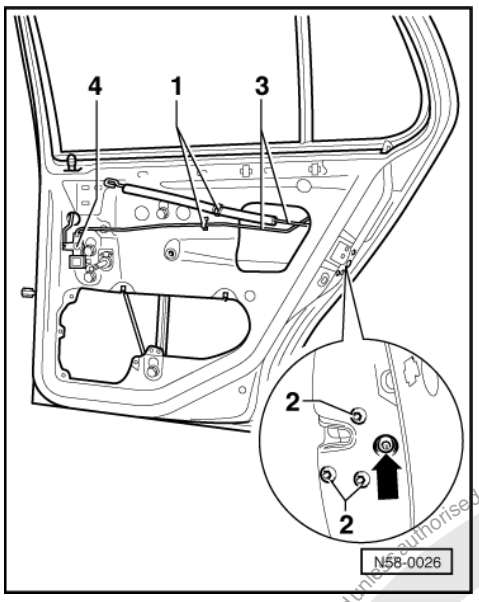

- -> Loosen door lock tolerance screw -arrow-.

Left-hand lock - right-hand thread
Right-hand lock - left-hand thread

Tighten tolerance screw (Torx T 20)
Tightening torque = 3 Nm.

Do not move tolerance screw sideways when tightening (e.g. by supporting the key on edge of hole). The door handle must be pushed onto door outer panel.

Tightening the tolerance screw also takes care of the adjustment.

1.13 - Door seals

Door seals are fitted in series production with a sealant, they are placed on the door flange and then rolled on.

Note:

If they are removed the sealant will spread on the inside of the seal and the flanks will be bent out slightly. If the seal is then refitted there is no guarantee that it will fit tightly and seal.

Therefore each seal which is removed completely should be replaced by a so called "hammer blow" seal.

When seals have been partially removed squeeze the flanks together before refitting.

Copyright by Volkswagen. Generated by copying for private or commercial purposes, in whole or in part, is not permitted unless authorised by Volkswagen AG. Volkswagen AG does not guarantee or accept any liability with respect to the correctness of information in this document.
satelettronica

1.14 - Removing and installing door inner seal

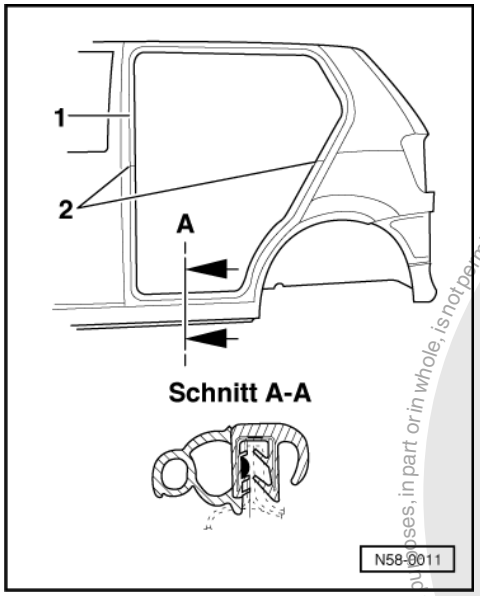

-> Door inner seal -1- grips over trim.

- Pull door inner seal off body flange.
- When installing seal start on the B pillar at the height of the door trim.
- Joint -2- bonded.
- For two-colour door inner seals the joint position is on the B pillar at the height of the trim -4-.

Protected by copyright. Copying for private or commercial purposes, in part or in whole, is not permitted unless authorised by Volkswagen AG. Volkswagen AG does not guarantee or accept any liability with respect to the correctness of information in this document. Copyright by Volkswagen AG.
satelettronica

60 - Sliding/tilting roof

1 - Sliding/tilting roof with glass panel > 09.99

1.1 - Sliding/tilting roof with glass panel > 09.99

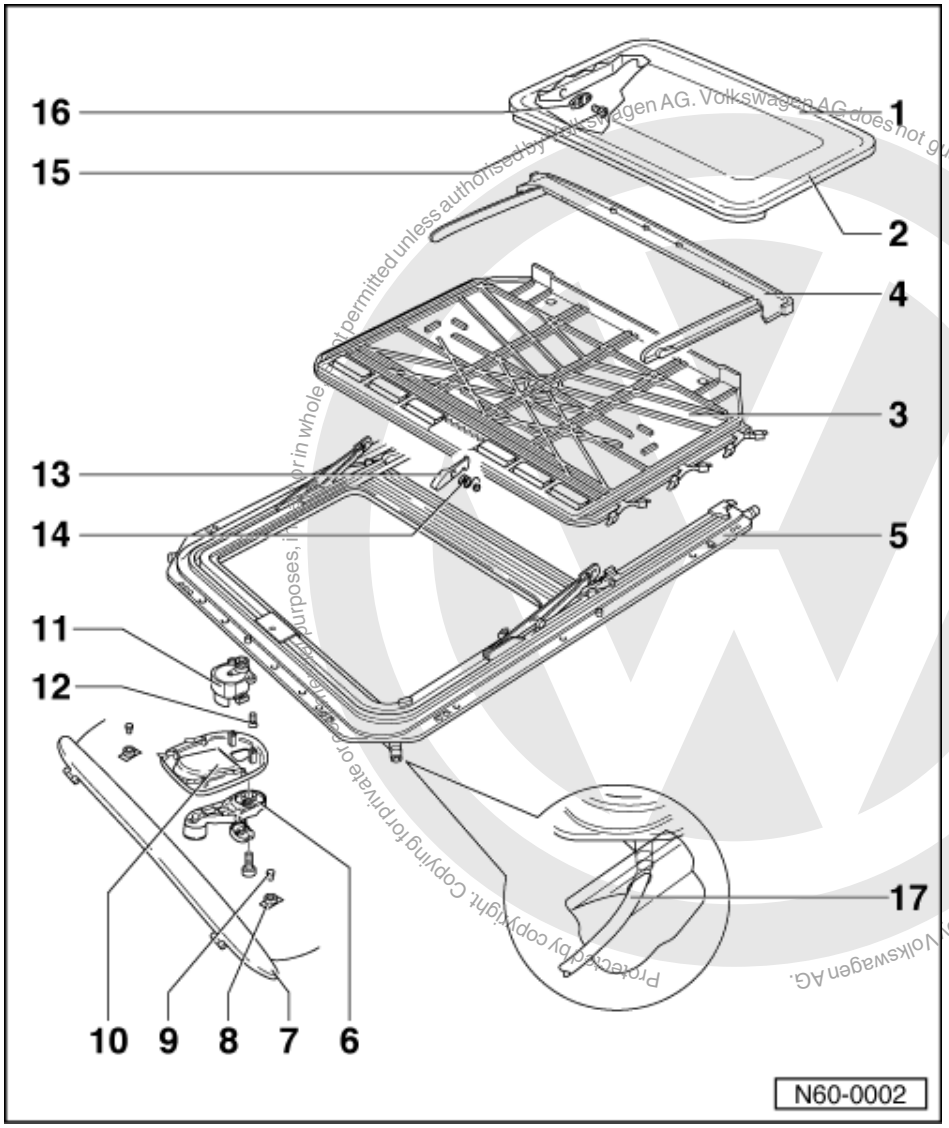

1.2 - Sliding/tilting roof with glass panel - Assembly overview

1 Glass panel for sliding/tilting roof (single pane safety glass)
- Removing sliding/tilting roof glass panel => Page 97
- Installing sliding/tilting roof glass panel => Page 98
- Adjusting sliding/tilting roof glass panel => Page 100

2 Panel seal
- Adjusting panel seal => Page 97
- Seal joint is in centre of right side section

satelettronica

- Treat panel seal clamping channel with water as lubricant before fitting

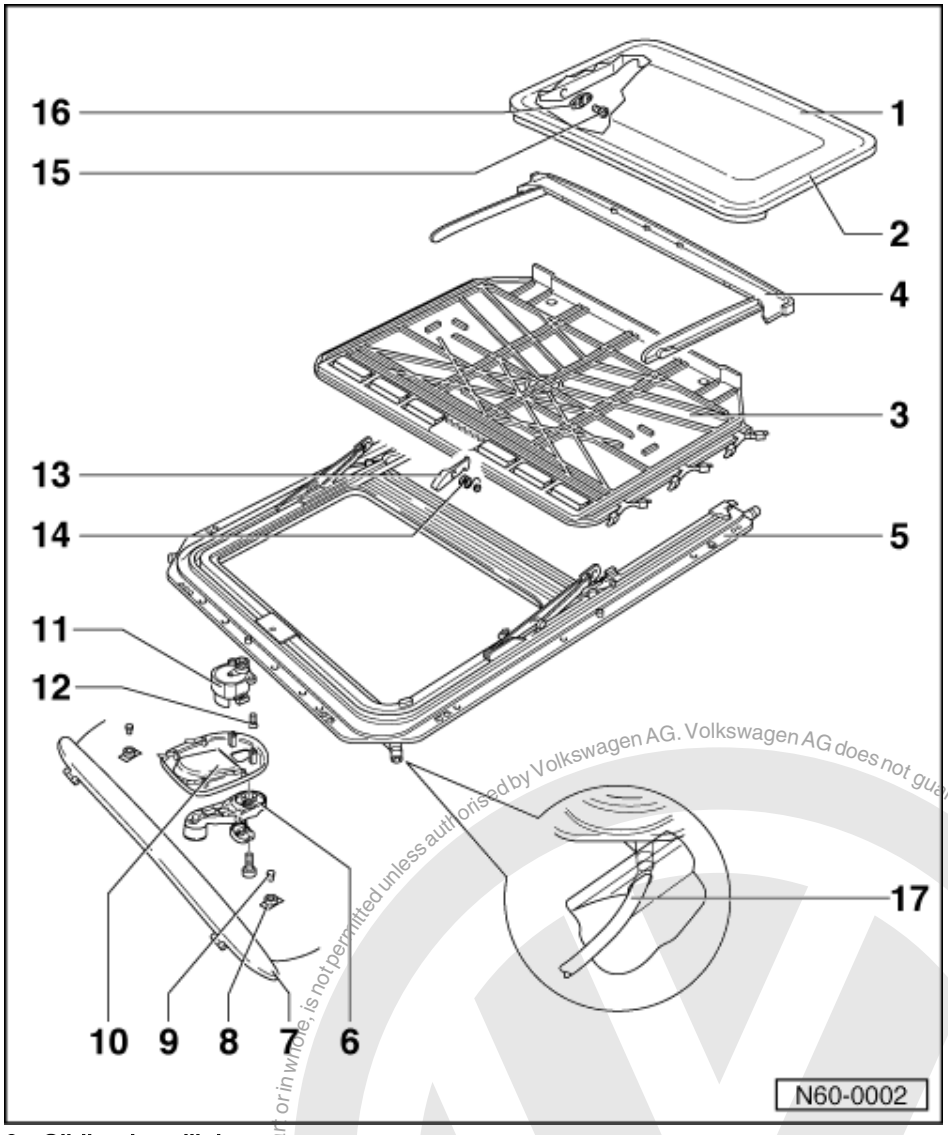

3 Sliding headlining
- Removing and installing sliding headlining =>Page 99

4 Trim frame
- Removing trim frame => removing sliding/tilting roof glass panel

5 Carrier unit
- Removing carrier unit =>Page 101
- Carrier unit consists of the following parts:
- U frame with guide channels, if required, guide channels are to be greased with special grease G 000 450 02 only, otherwise correct operation cannot be guaranteed.
- Multi-purpose grease must not be used under any circumstances.
- Rear guides with cables
- Front guides

Protected by copyright. Copying for private or commercial purposes, in part or in whole, is not permitted unless authorised by Volkswagen AG. Volkswagen AG does not guarantee or accept any liability with respect to the correctness of information in this document. Copyright by Volkswagen AG.
satelettronica

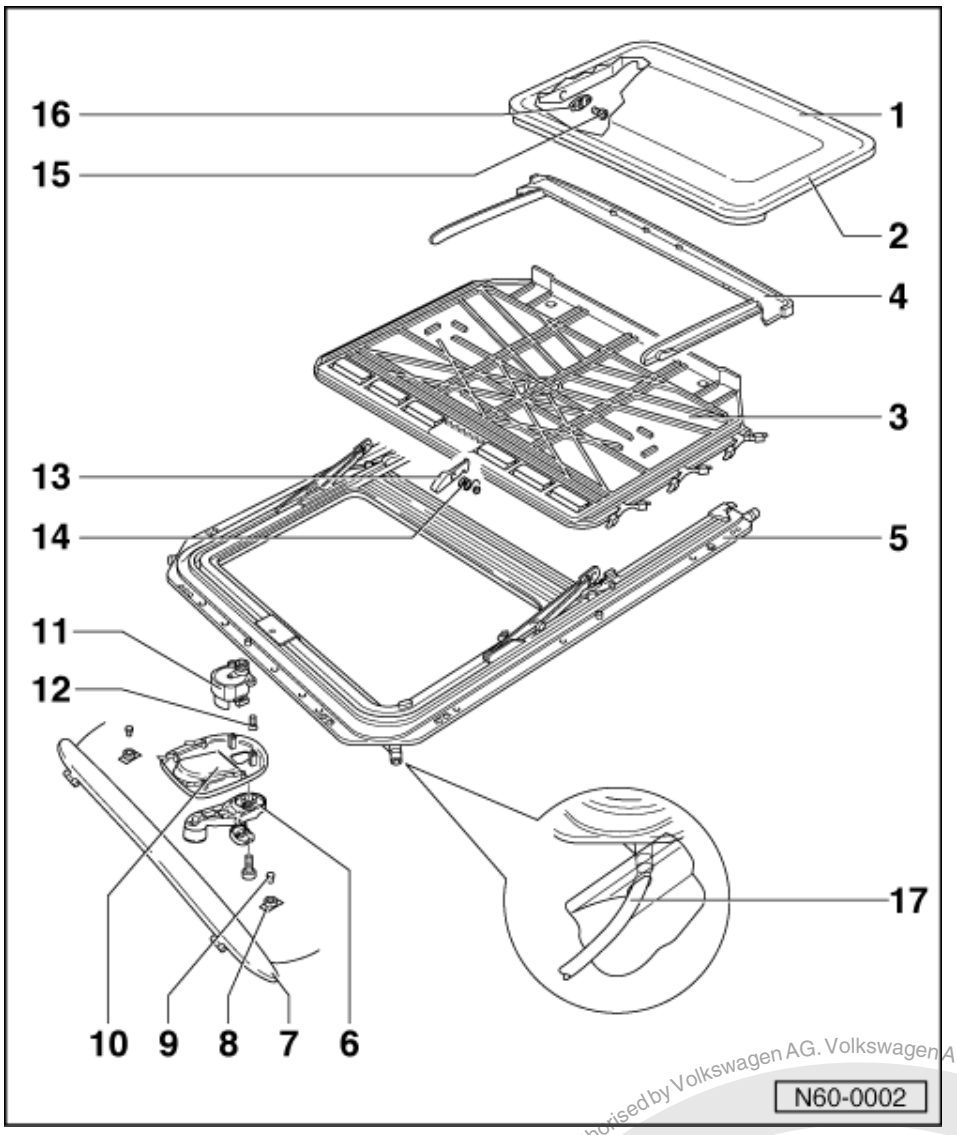

6 Hand crank
7 Wind deflector
- Open panel to rear and unscrew wind deflector

8 Threaded formed piece
- Thread must be at an angle to rear

9 Wind deflector securing screws
10 Manual drive unit cover
11 Drive unit (manual)
12 Countersunk screws (micro encapsulated)
- Always use new countersunk screws
- 3 Nm

satelettronica
Protected by copyright. Copying for private or commercial purposes, in part or in whole, is not permitted unless authorised by Volkswagen AG. Volkswagen AG does not guarantee or accept any liability with respect to the correctness of information in this document. Copyright by Volkswagen AG.

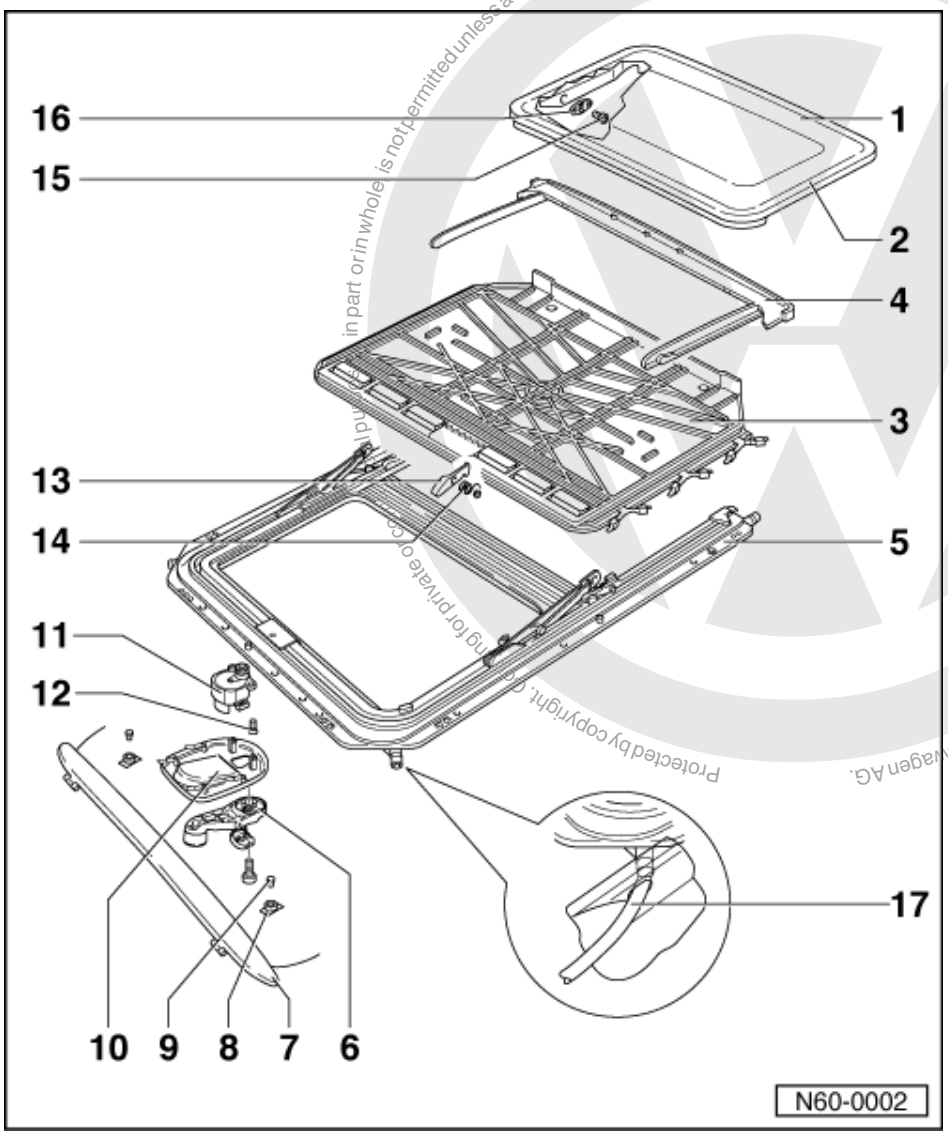

13 Locating hook
14 Locating hook spring
15 Torx screw
- Torx key T 25
- 6 Nm

16 Adjusting plate
- Part of link piece guide

17 Water drain hose
- Cleaning water drain hose => Page 104

Protected by copyright. Copying for private or commercial purposes, in part or in whole is not permitted unless authorised by Volkswagen AG. Volkswagen AG does not guarantee or accept any liability with respect to the correctness of information in this document. Copyright by Volkswagen AG.
satelettronica

1.3 - Removing sliding/tilting roof glass panel

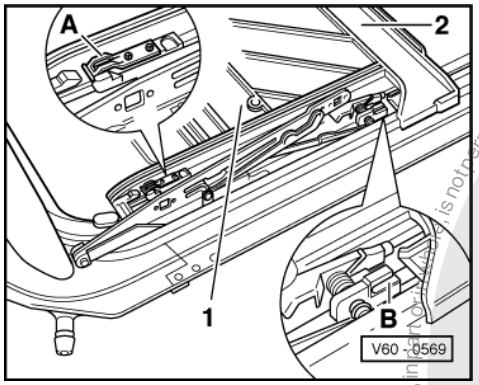

- Tilt sliding/tilting roof open.
- -> Slide sliding headlining -1-to rear.
- Slide trim frame -2- to rear (clipped on in area of front guide -A- and guided at rear by guide -B-).

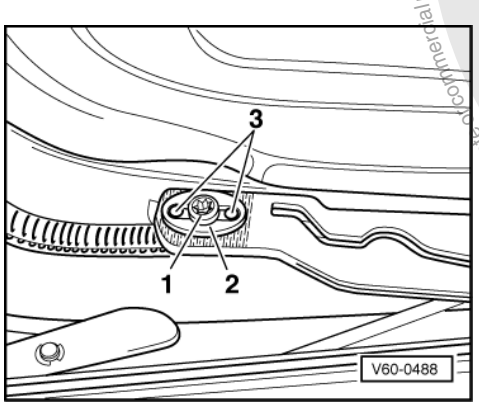

- -> Remove securing screw -1- (Torx key T 25).
- Take sliding/tilting roof panel out upwards.

1.4 - Adjusting panel seal

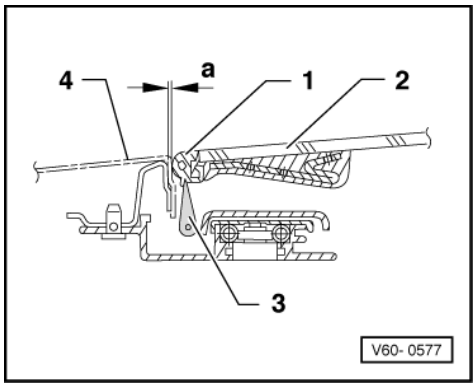

- -> Check that the pre-tension between panel seal -1- and body -4- is uniform all-round using a 0.3 mm thick strip of paper (a = 0.3 mm, a visiting card for example). It must be possible to pull the paper strip through between the panel seal and body under tension.
- If the pre-tension is too little, the panel seal can be pushed apart with a wedge -3-, or if the pre-tension is too great, pushed together. To adjust the panel seal, the glass panel -2- must be removed.

Protected by copyright. Copying for private or commercial purposes, in any form or by any means, is not permitted unless authorised by Volkswagen AG. Volkswagen AG does not guarantee or accept any liability with respect to the correctness of information in this document. Copyright by Volkswagen AG.
satelettronica

1.5 - Installing sliding/tilting roof glass panel

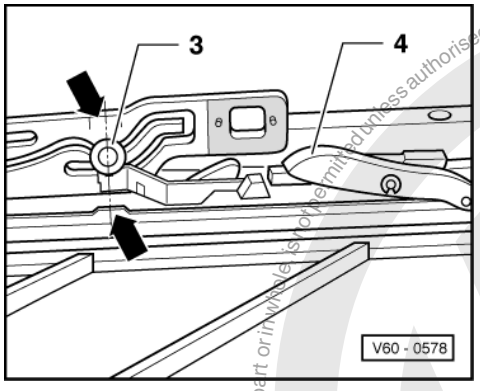

Panel must be installed in "0 position" (panel closed).

0 position:

-> Pin -3- must be within the marks (notches) -arrow-.

Locating hooks -4- must be located in the guide rails.

If this is not the case, adjust parallel running => Page 99 .

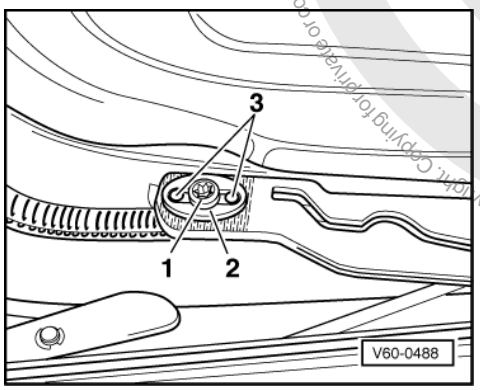

- Place sliding/tilting roof on from above and screw in securing screws (link/panel).
- Lightly tighten securing screws (Torx T 25).

Notes:

- When tightening the Torx screws -1-, be sure that the adjusting plate is properly seated (the adjusting plates -2- are part of the link piece guide.)
- Tighten securing screws after adjusting glass panel height (6 Nm).

1.6 - Removing sliding headlining

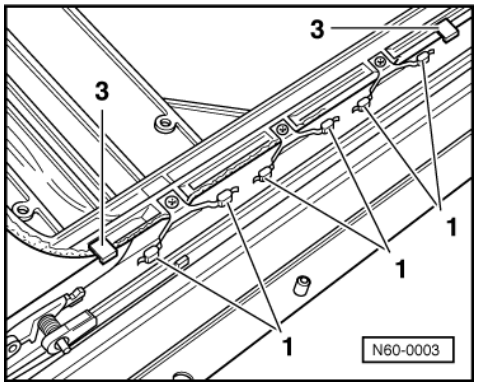

Protected by copyright. Copying for private or commercial purposes, in part or in whole, is not permitted unless authorised by Volkswagen AG. Volkswagen AG does not guarantee or accept any liability with respect to the correctness of information in this document. Copyright by Volkswagen AG.
satelettronica

Sliding/tilting roof glass panel and trim frame removed and sliding/tilting roof unit in "closed position".

- -> Unclip stop -3- on one side and press headlining towards this side. Lever slide -1- out of the guide channel, on the opposite side, (from front to rear) with a screwdriver.
- Swing headlining out of assembly unit.

1.7 - Installing sliding headlining

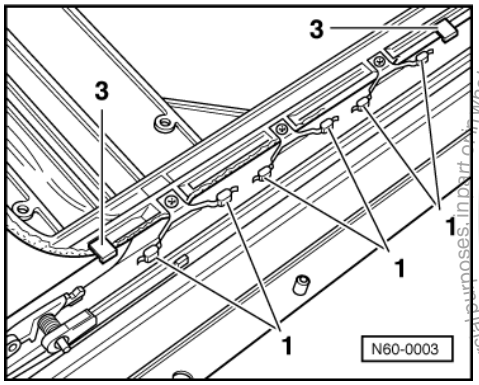

- -> Insert sliding headlining in the roof cut-out. Insert sliding headlining slide in guide channel (slide engaged into sliding headlining). Insert slide on opposite side into guide channel and fit the side stops -3-

1.8 - Checking parallel running

Sliding/tilting roof glass panel closed.

- Push sliding headlining fully back by hand.

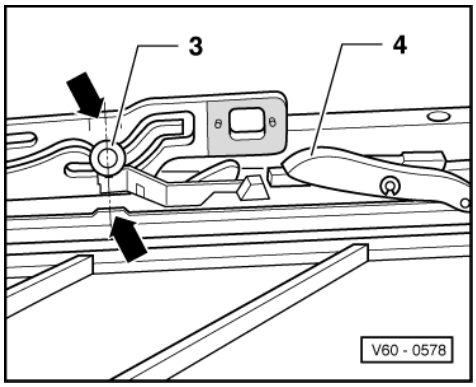

- Push trim frame to rear (clipped-on in area of front guide and guided at rear by a pack).
- -> Pin -3- must be within the notches -arrows-. At the same time the locating hooks -4- must be engaged in the guide rails. If the pins -3- are not within the notches, the parallel running must be adjusted.

1.9 - Adjusting parallel running

Sliding/tilting roof glass panel closed.

- Fully push back sliding headlining and trim frame.
- Remove cover from drive unit.

Protected by copyright. Copying for private or commercial purposes, in part or in whole, is not permitted unless authorised by Volkswagen AG. Volkswagen AG does not guarantee or accept any liability with respect to the correctness of information in this document. Copyright by Volkswagen AG.
satelettronica

- Remove drive unit. Always use new screws (securing screws are micro-encapsulated) 3 Nm.

Note:

The drive pinion must no longer be in mesh with the cables.

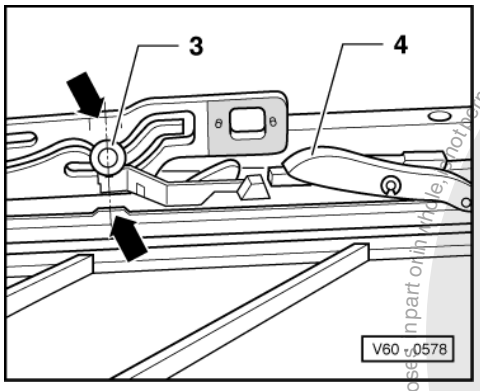

- -> Slide rear guides from front to rear only to the marks (notches) -arrows-.
- Pin -3- must be within the markings (notches) -arrows-. Locating hooks -4- must be engaged in the guide rails.

1.10 - Adjusting height of sliding/tilting roof glass panel

Sliding/tilting roof parallel running OK.

- Tilt glass panel open.
- Fully push back sliding headlining.
- Release trim frame and push to rear.
- Close glass panel.
- Loosen all four screws on glass panel (floating alignment in roof cut-out).

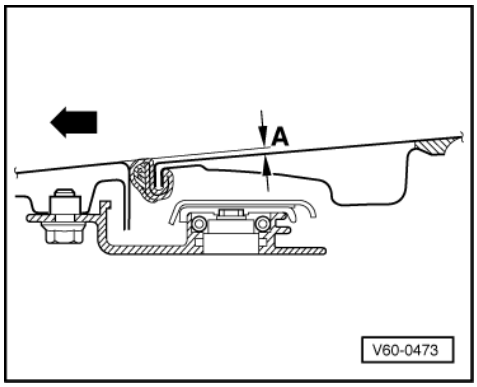

- To prevent wind noises carry out front and rear height adjustment in accordance with illustrations.

-> Panel adjustment front:

a = 1 mm lower than roof

Arrow = Direction of travel (forwards)

Protected by copyright. Copying for private or commercial purposes, in part or in whole, is not permitted unless authorised by Volkswagen AG. Volkswagen AG does not guarantee or accept any liability with respect to the correctness of information in this document. Copyright by Volkswagen AG.
satelettronica

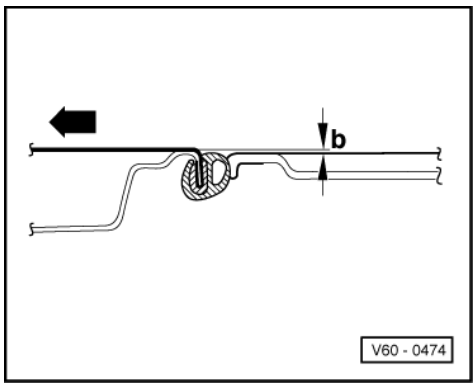

-> Panel adjustment rear:

b = 1 mm higher than roof

Arrow = Direction of travel (forwards)

- Tighten screws of glass panel (6 Nm).
- Slide trim frame forwards and clip in (clipped-in in the front frame area and guided at rear by pack).

1.11 - Removing and installing carrier unit

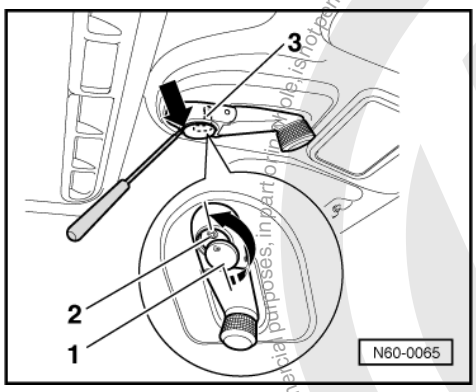

Removing

- -> Lever off cover cap -1- at rear -arrow- and swivel by 180°. If the cover cap becomes detached from the press stud -3- it only needs to be clipped in again.
- Remove Torx bolt -2- T 20 (2,2 Nm) and pull hand crank off drive.

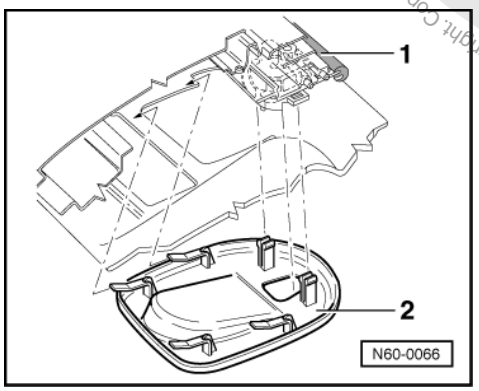

- -> Unclip rear area of cover -2- and slide cover out of moulded headlining towards rear.
- Pull beading -1- off headlining cut-out. To assist fitting the replacement beading is supplied with a cord in the clamping channel.

Protected by copyright. Copyright by Volkswagen AG. Volkswagen AG does not guarantee or accept any liability with respect to the correctness of information in this document. Copyright by Volkswagen AG. unless authorised by Volkswagen AG. Volkswagen AG does not guarantee or accept any liability with respect to the correctness of information in this document. Copyright by Volkswagen AG.
satelettronica

- Remove moulded headlining

=> General body repairs, interior; Repair group 70; Roof trim; Removing and installing moulded headlining Roof trim Removing and installing moulded headlining

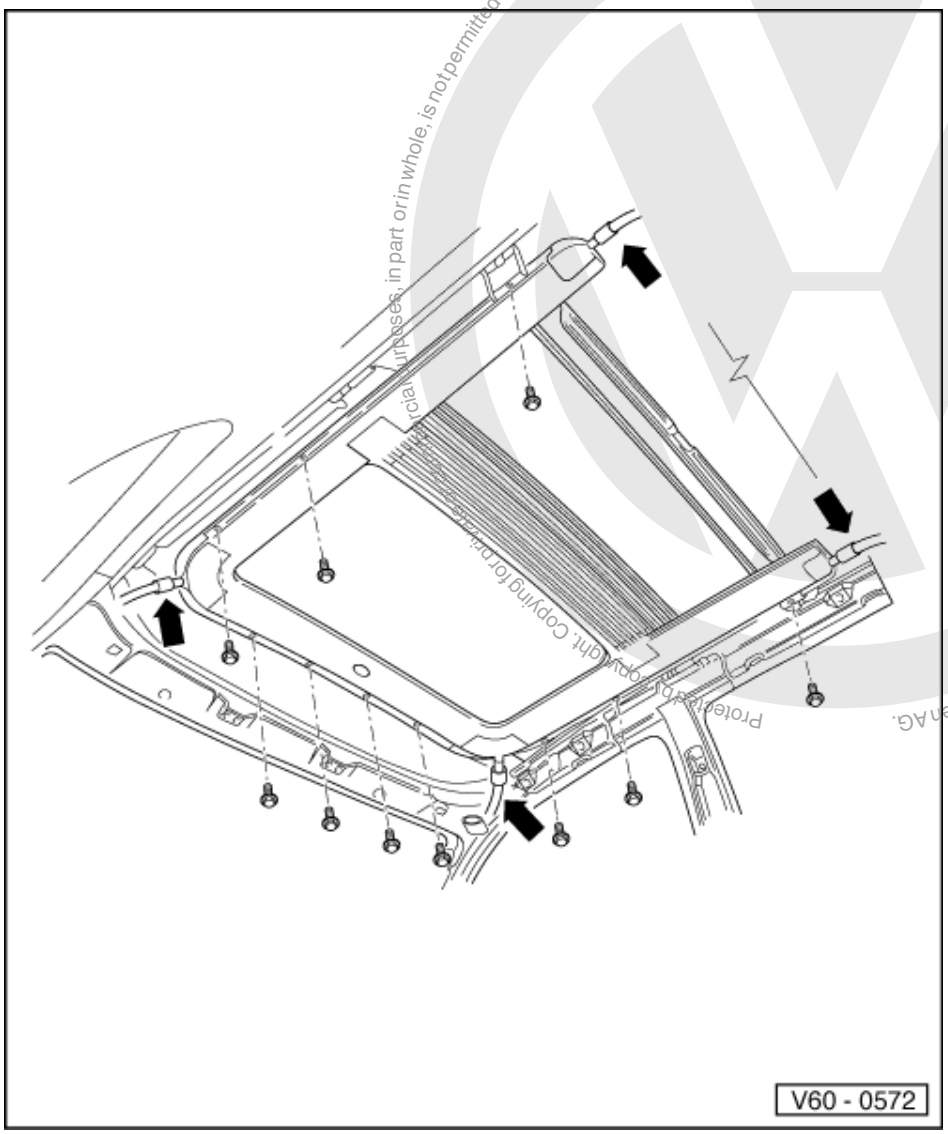

- Pull water drain hoses -arrows- off the carrier unit.
- Remove drive unit.
- For easier installation remove sliding/tilting roof glass panel => Page .
- Remove hexagon bolts and lift out carrier unit from vehicle with help of second mechanic.

Note:

The carrier unit can also be removed complete.

Installing

- Place carrier unit on the rear mountings and swing upwards (the three fixing pins must locate in the mounting holes).
- Screw-on carrier unit (7.5 Nm).

Protected by copyright. Copyright Copying for private or commercial purposes, in part or in whole, is not permitted unless authorised by Volkswagen AG. Volkswagen AG does not guarantee or accept any liability with respect to the correctness of information in this document. Copyright by Volkswagen AG.
satelettronica

1.12 - Setting "Zero position" on sliding/tilting roof drive

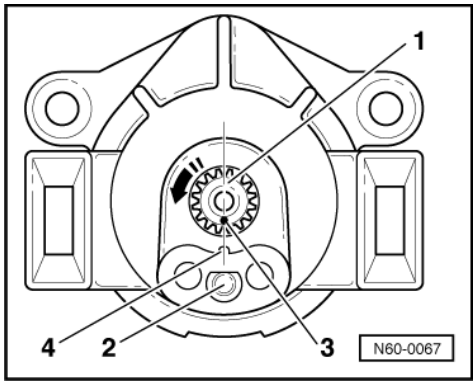

- Remove sliding/tilting roof drive.
- -> Push in locking pin -2- on sliding/tilting roof drive.
- Turn pinion -1- by hand to stop in raised position -arrow-. When doing this the locking pin -2- remains depressed.
- Mark pinion -1- with a spot -3- (spot -3- aligns with the locating lug -4-).

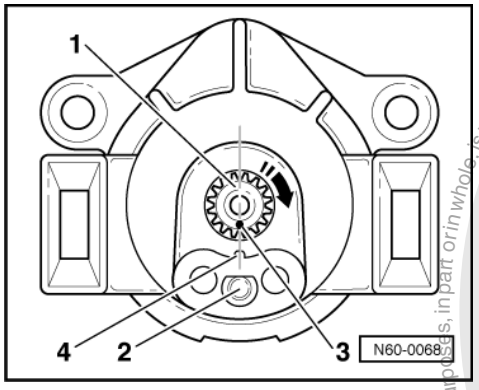

- -> Turn pinion -1- back two turns to "Zero position". The locking pin -2- will now jump out. The marking -3- must align with the locking lug -4-.
- Install the sliding/tilting roof drive in the "Zero position" of glass panel (check parallel running => Page 99).

Protected by copyright. Copying for private or commercial purposes, in part or in whole, is not permitted unless authorised by Volkswagen AG. Volkswagen AG does not guarantee or accept any liability with respect to the correctness of information in this document. Copyright by Volkswagen AG.
satelettronica

1.13 - Cleaning water drain hoses

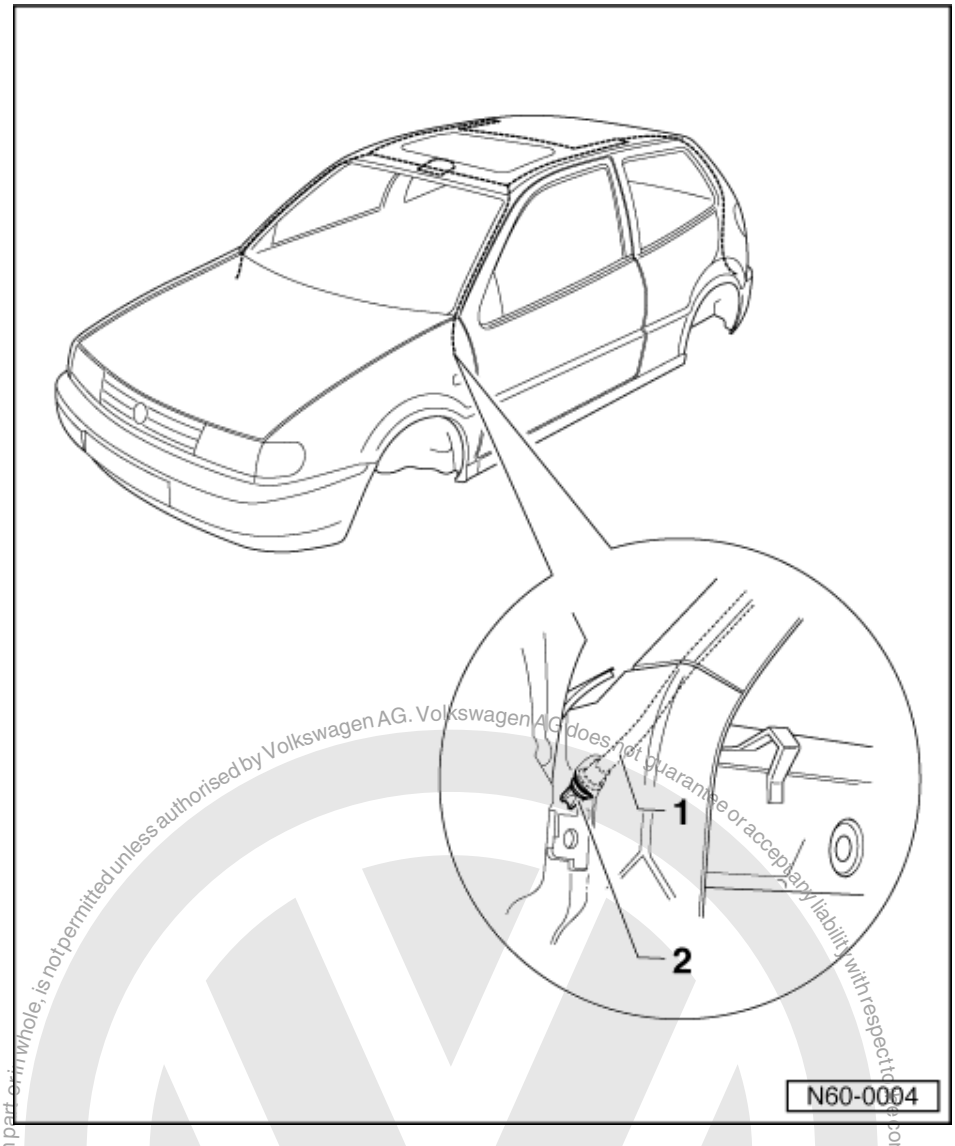

Front water drain hoses:

The front water drain hoses -1- are routed in the "A pillars" and end between door and A pillar. Cleaning is done from the sliding/tilting roof panel aperture.

1 - Front water drain hoses

2 - Water drain valve

Note:

For cleaning, a locally manufactured tool made from a speedometer inner cable, approx. 2300 mm long, is recommended.

Protected by copyright. Copying for private or commercial purposes, in part or in whole, is not permitted unless authorised by Volkswagen AG. Volkswagen AG does not guarantee or accept any liability with respect to the correctness of information in this document. Copyright by Volkswagen AG.
satelettronica

Protected by copyright. Copying for private or commercial purposes, in part or in whole, is not permitted unless authorised by Volkswagen AG. Volkswagen AG does not guarantee or accept any liability with respect to the correctness of information in this document. Copyright by Volkswagen AG.

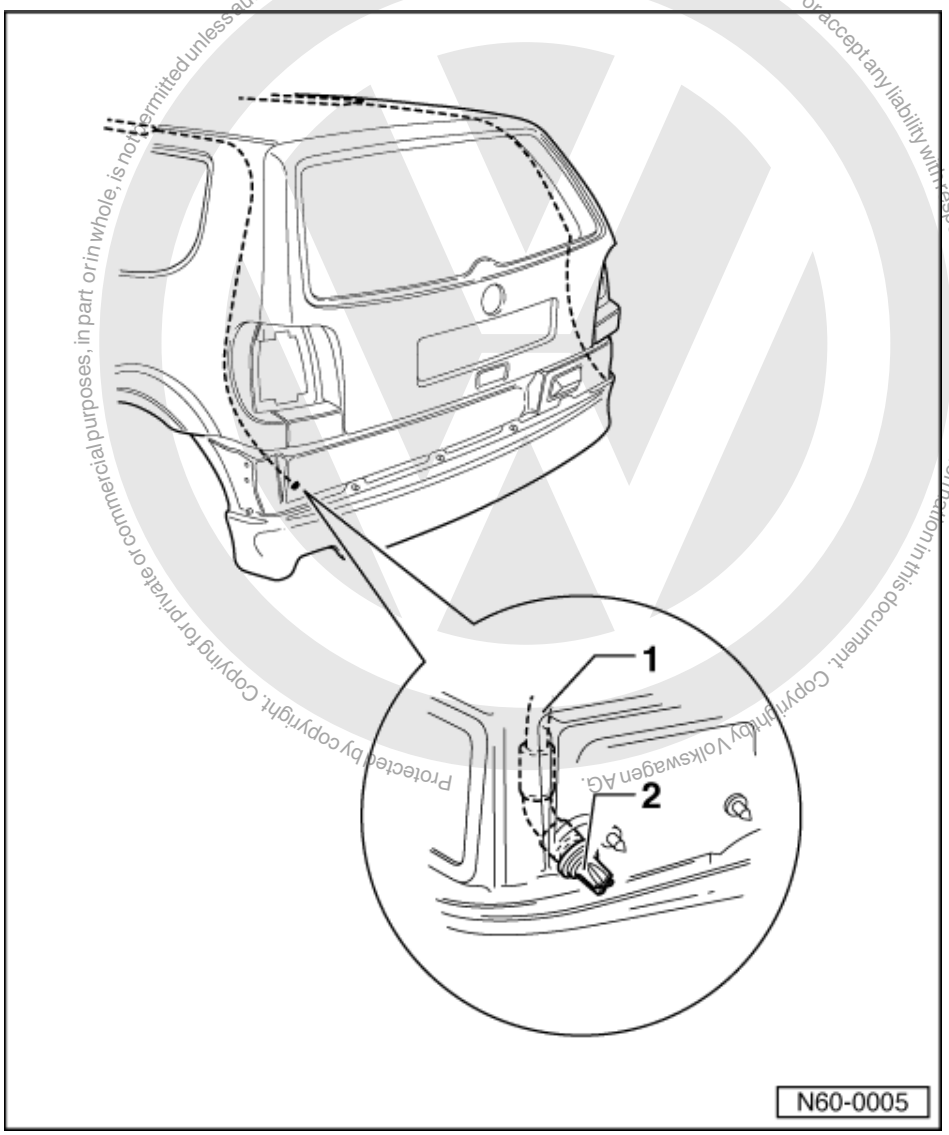

Rear water drain hoses:

The rear water drain hoses -1- are routed in the "C pillars" and end behind the bumper cover. Cleaning is performed from the lower end of the hose. To do this, the bumper must be removed.

1 - Water drain hose

2 - Water drain valve

Note:

For cleaning a locally manufactured tool made from a speedometer inner cable, approx. 2300 mm long is recommended.

satelettronica

1.14 - Sliding/tilting sunroof with glass panel 10.99 >

1.15 - Function

With ignition switched on the sliding/tilting sunroof is opened and closed by turning the rotary switch.

After switching off the ignition the siding/tilting sunroof can be opened or closed until either the driver's or front passenger's door is opened.

On the rotary switch there are marks for preset sliding or tilting positions of the glass panel. Any other intermediate opening or tilting position can be selected by turning the switch in the appropriate direction.

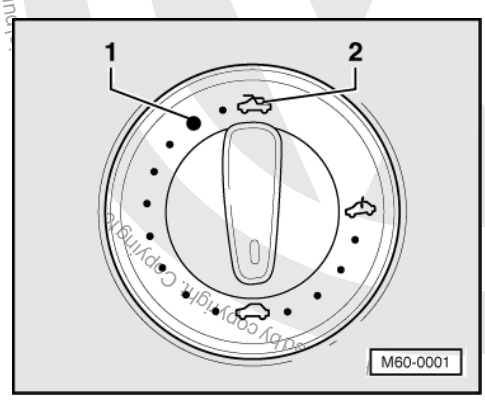

-> Opening the sliding/tilting sunroof to switch position -1-, the so called comfort position, prevents wind noises which to a great extent which would occur if opening fully with switch position -2-.

The sliding/tilting sunroof is equipped with a excess force limitation system (roll-back) for the sliding function. The roof will open automatically when contacting an obstruction during the closure sequence.

In addition there is an emergency closing function. If problems occur when closing the sliding roof, the emergency closing function can be initiated pressing the preselector switch when it is in the "sunroof closed" position.

The "roll back" function is disengaged when using the compulsory closure function.

The sliding/tilting sunroof drive is protected against overheating by a time limiter. The protective mechanism operates when the sunroof is operated continuously for approx. 2 minutes. It is functional again after a cooling-off phase.

satelettronica

1.16 - Sliding/tilting roof with glass panel - Assembly overview

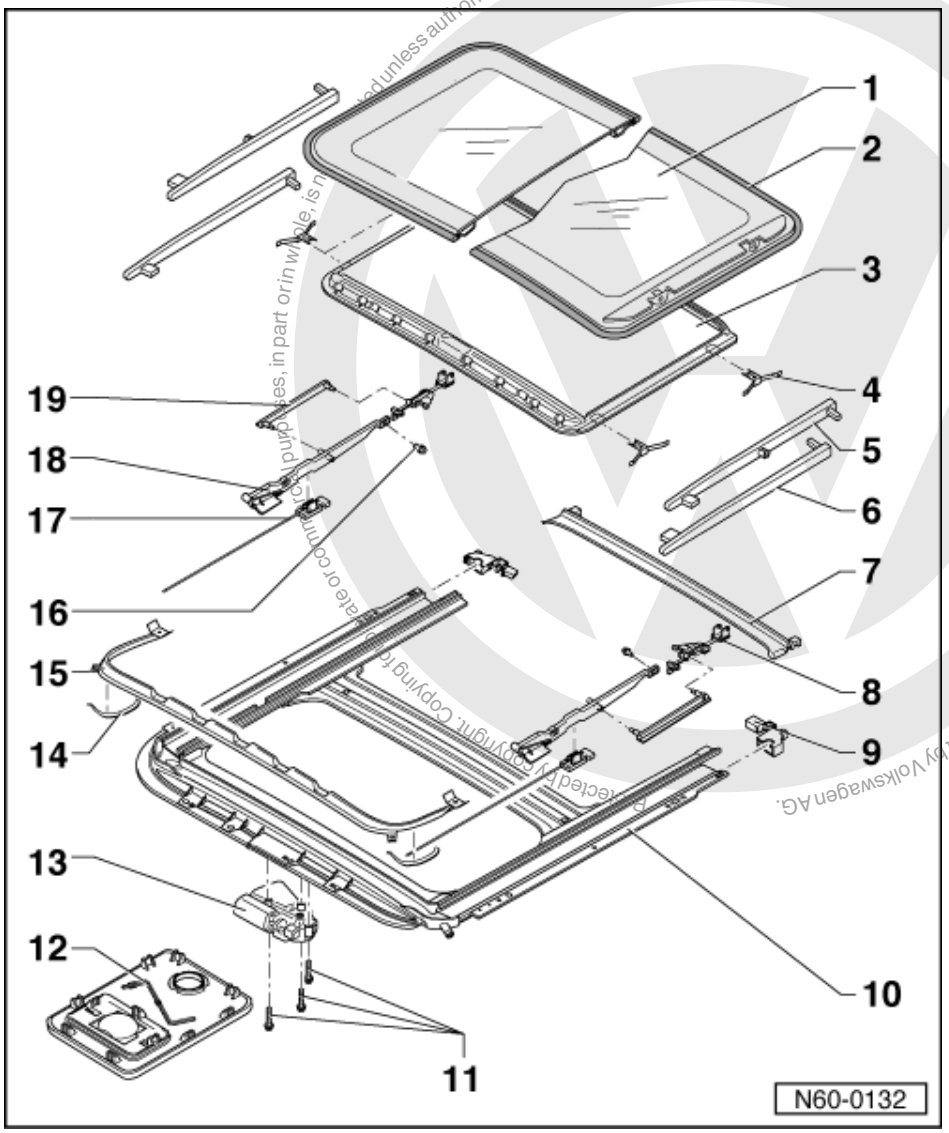

1 Glass panel for sliding/tilting roof (single pane safety glass)
- Removing sliding/tilting sunroof glass panel => Page 111
- Installing sliding/tilting sunroof glass panel => Page 111
- Adjusting sliding/tilting roof glass panel => Page 112

2 Panel seal
- Adjusting panel seal => Page 97
- Seal joint located centrally at rear
- Renewing panel seal => Page 97

satelettronica

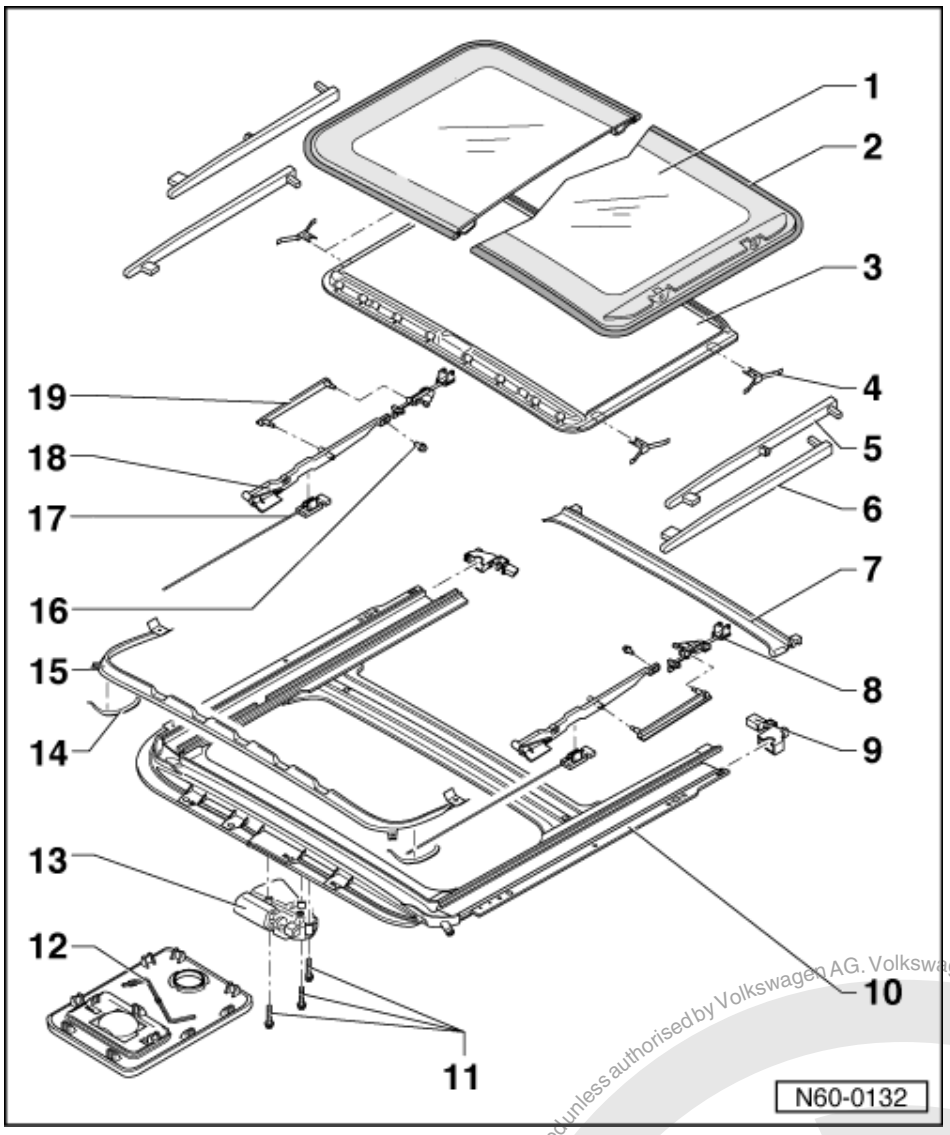

3 Sliding headlining
- Removing and installing sliding headlining =>Page 115

4 Slide

5 Upper trim
- Removing => Page 111

6 Lower trim
- Removing => Page 111

7 Water channel
- Removing => Page 122 , Removing guide rail and cable

8 Guide locking hook

9 End piece
- Use Butyl adhesive sealing cord AKL 450 005 05 to seal

Protected by copyright. Copying for private or commercial purposes, in part or in whole, is not permitted unless authorised by Volkswagen AG. Volkswagen AG does not guarantee or accept any liability with respect to the correctness of information in this document. Copyright by Volkswagen AG.
satelettronica

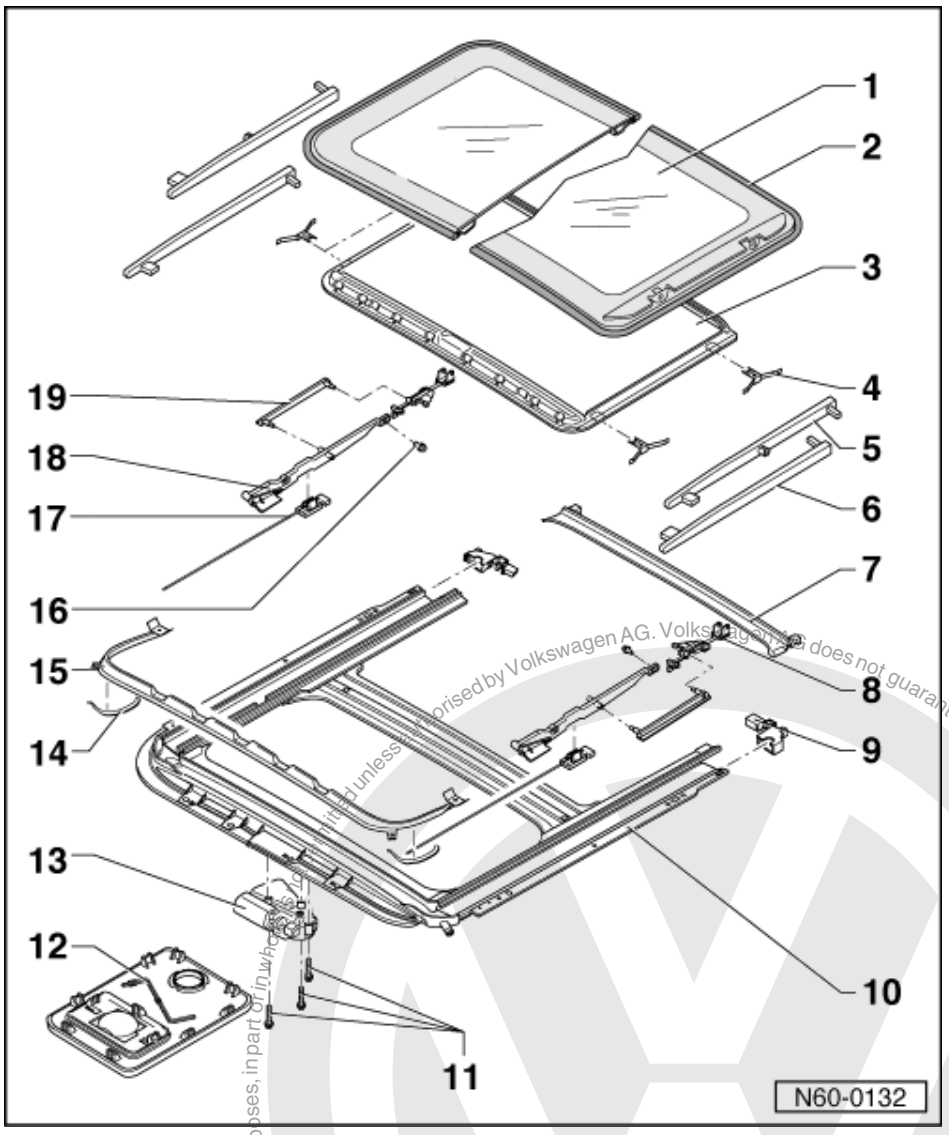

10 Carrier unit
- Removing and installing carrier unit =>Page 120
- If required, guide channels are to be greased with special grease G 000 450 02 only, otherwise correct operation cannot be guaranteed.

11 Bolt
- 3.5 Nm
- Must always be replaced

12 Hexagon key for emergency operation
- Clipped into cover for electric drive

13 Electric drive
- Removing => Page 117
- Adjusting drive (0 position) => Page 117

14 Spring

15 Wind deflector
- Removing => Page 115

Protected by copyright. Copying for private or commercial purposes, in part or in whole, is not permitted unless authorised by Volkswagen AG. Volkswagen AG does not guarantee or accept any liability with respect to the correctness of information in this document. Copyright by Volkswagen AG.
satelettronica

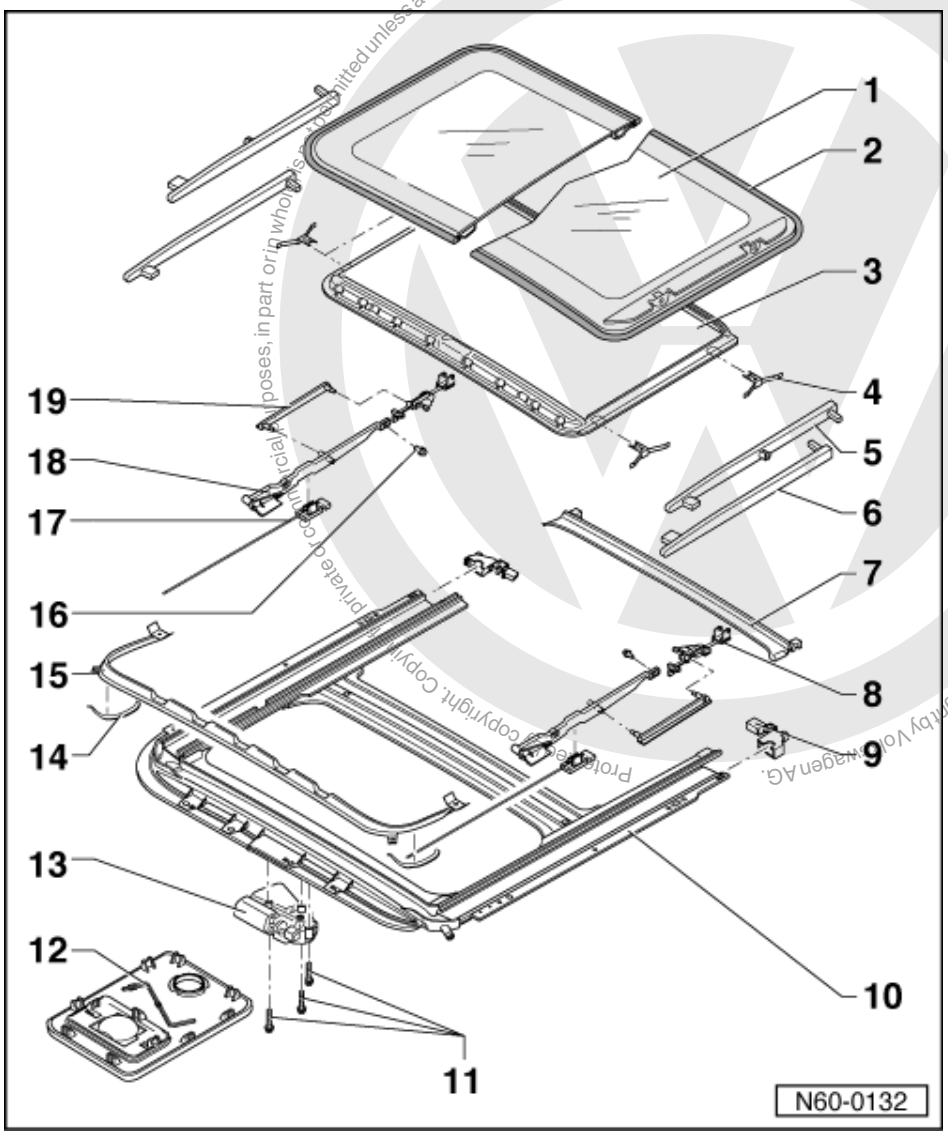

16 Torx screw
- Torx key T 25
- 4.5 Nm

17 Guide rail and cable
- Removing => Page 119

18 Coulisse guide rail
- Removing => Page 119

19 Spacer

Protected by copyright. Copyright by Volkswagen AG. Volkswagen AG does not guarantee or accept any liability with respect to the correctness of information in this document. Copyright by Volkswagen AG. Reproduced by Volkswagen AG. Volkswagen AG does not guarantee or accept any liability with respect to the correctness of information in this document. Copyright by Volkswagen AG. Reproduced by Volkswagen AG. Volkswagen AG does not guarantee or accept any liability with respect to the correctness of information in this document. Copyright by Volkswagen AG. Reproduced by Volkswagen AG. Volkswagen AG does not guarantee or accept any liability with respect to the correctness of information in this document. Copyright by Volkswagen AG. Reproduced by Volkswagen AG. Volkswagen AG does not guarantee or accept any liability with respect to the correctness of information in this document. Copyright by Volkswagen AG. Reproduced by Volkswagen AG. Volkswagen AG does not guarantee or accept any liability with respect to the correctness of information in this document. Copyright by Volkswagen AG. Reproduced by Volkswagen AG. Volkswagen AG does not guarantee or accept any liability with respect to the correctness of information in this document. Copyright by Volkswagen AG. Reproduced by Volkswagen AG. Volkswagen AG does not guarantee or accept any liability with respect to the correctness of information in this document. Copyright by Volkswagen AG.

satelettronica

1.17 - Removing sliding/tilting sunroof glass panel

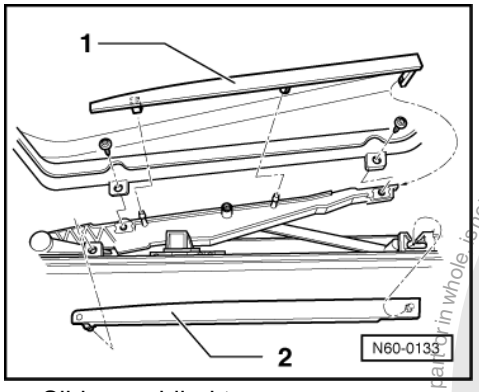

- Slide sun blind to rear.
- Tilt sliding/tilting roof open.
- -> Unclip lower trim -2- in forward area, inwards to centre of vehicle and unhook at rear.
- Unclip upper trim -1- at front and centre and unhook at rear.

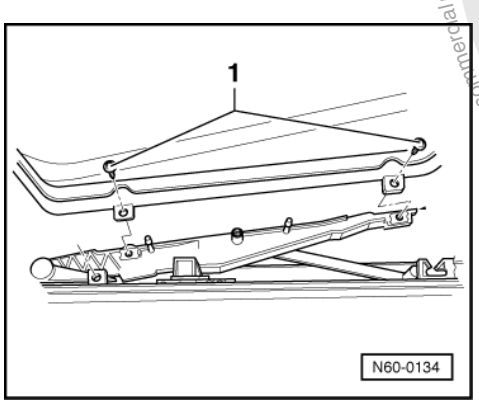

- -> Remove securing screws -1- (Torx bit T 25; 4.5 Nm).
- Take sliding/tilting roof panel out upwards.

Note:

The sliding/tilting sunroof must not moved to position "Open" when removed, because the water channel will not be compressed by the glass panel and can cant inside the roof.

1.18 - Installing sliding/tilting sunroof glass panel

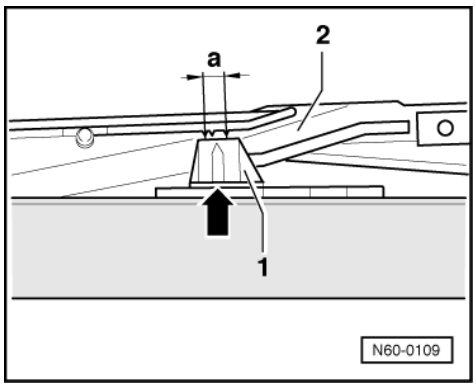

Panel must be installed in "0 position" (panel closed).

Protected by copyright. Copying for private or commercial purposes, in part or in whole, is not permitted unless authorised by Volkswagen AG. Volkswagen AG does not guarantee or accept any liability with respect to the correctness of information in this document. Copyright by Volkswagen AG.
satelettronica

"0" position:
-> The mark -arrow- on the rear of the guide upper section -1- must, on both sides, lie within the marks -dimension a- on the guide rail gate -2-.
The coulisse guide rail -2- must be located in the guide rails (cannot be moved by hand).
If this is not the case, adjust parallel running => Page 118 .

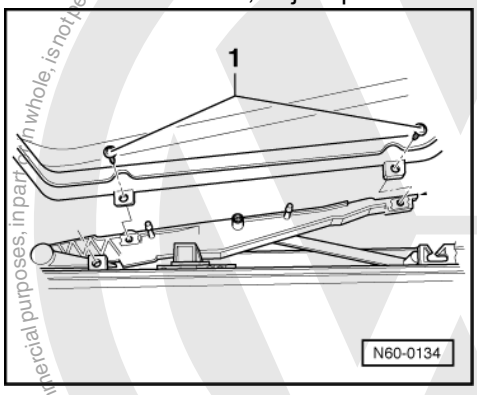

- -> Place sliding/tilting roof on from above and screw in securing screws (guide rail/panel).
- Tighten securing screws -1- lightly (Torx T 25).

Note:
After adjusting panel height tighten securing screws =>Page 112 (4.5 Nm).

1.19 - Sliding/tilting roof glass panel (height adjustment)

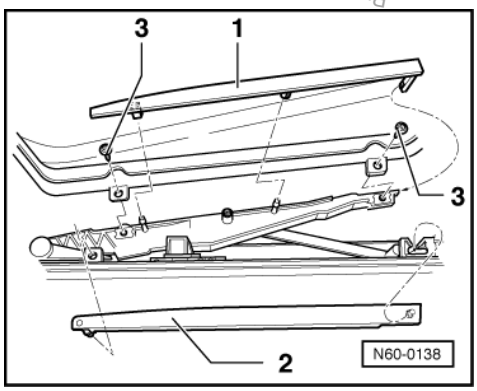

Sliding/tilting roof "0" position OK.
- Tilt sliding/tilting roof open.
- Slide sun blind to rear.
- -> Unclip lower trim -2- in forward area, inwards to centre of vehicle and unhook at rear.
- Unclip upper trim -1- at front and centre and unhook at rear.
- Remove securing screws -3- (Torx key T 25; 4.5 Nm).

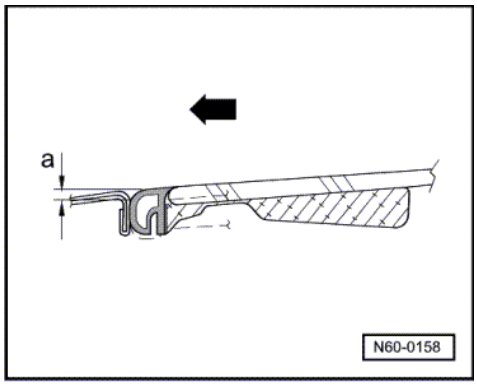

Protected by copyright. Copyright by Volkswagen AG. Volkswagen AG does not guarantee or accept any liability with respect to the correctness of information in this document. Copyright by Volkswagen AG. Reproduction, in part or in whole, is not permitted for commercial purposes, in part or in whole, is not permitted for commercial purposes.
satelettronica

- Run glass panel into "open" position.
- Run glass panel into "closed" position.
- Carry out height adjustment of glass panel at front and rear on both sides as follows:

-> Panel adjustment front:
a = 0...1 mm lower than roof level
Arrow = Direction of travel (forwards)

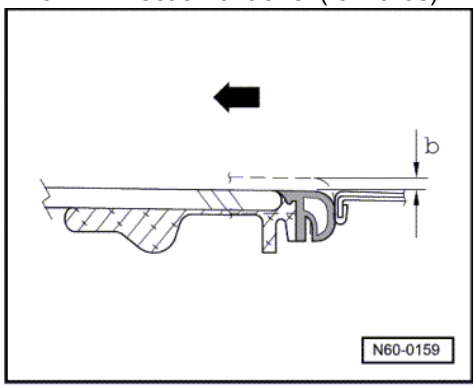

-> Panel adjustment rear:
b = 0...1 mm higher than roof level
Arrow = Direction of travel (forwards)
- Tighten screws for glass panel (4.5 Nm).

Always tighten left and right-hand glass panel sides symmetrically.
- Tilt sliding/tilting roof open.

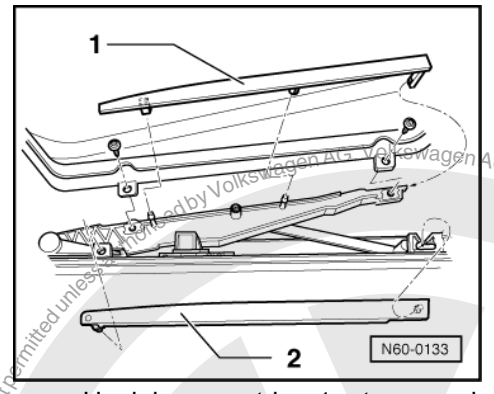

- -> Hook in upper trim -1- at rear and clip front and centre in.
- Hook in rear of lower trim -2- and clip front in.

1.20 - Adjusting panel seal

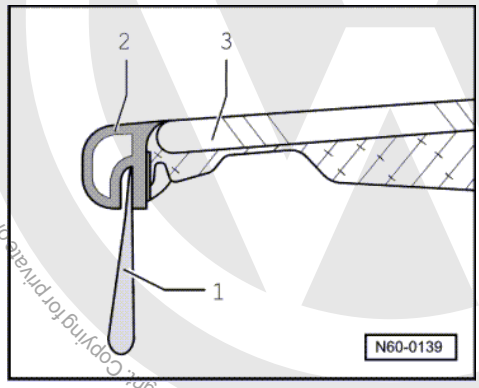

Protected by copyright. Copying for private or commercial purposes, in part or in whole, is not permitted unless authorised by Volkswagen AG. Volkswagen AG does not guarantee or accept any liability with respect to the correctness of information in this document. Copyright by Volkswagen AG.
satelettronica

- -> Check that the pre-tension between panel seal -2- and body is uniform all-round using a 0.3 mm thick strip of paper (a visiting card for example). It must be possible to pull the paper strip through between the panel seal and body under tension.
- If the pre-tension is insufficient, the panel seal can be pushed apart with a wedge -1-, or if the pre-tension is excessive pushed together. To adjust the panel seal the glass panel -3- must be removed.

1.21 - Renewing panel seal

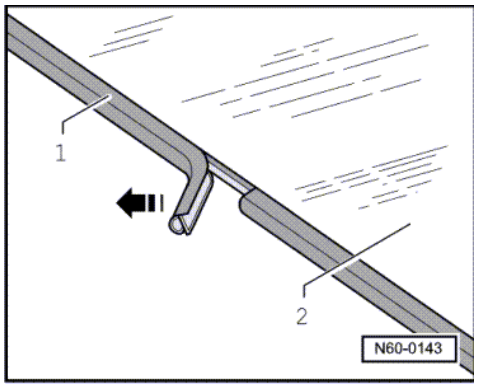

- Removing glass panel for sliding/tilting sunroof => Page 111 .
- -> Pull seal -1- off glass panel -2- in direction of arrow starting in centre of rear edge of glass panel.
- Remove all adhesive remains from edge of glass panel.

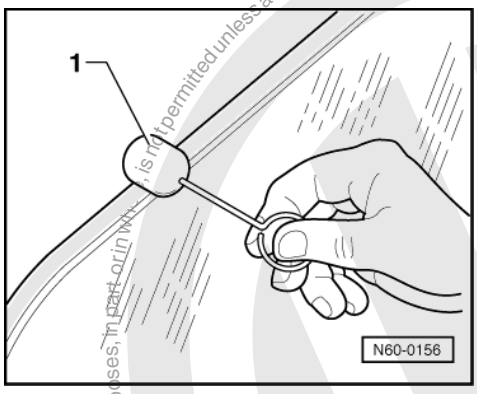

- -> Using applicator (D 009 500 25) -1- apply the primer included in the seal set =>current parts catalogue, around the complete bonding area of the glass panel.

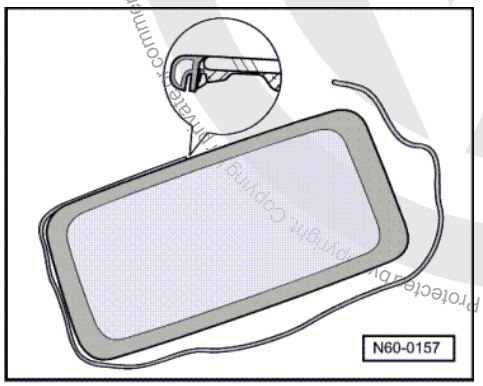

- -> Pull the protective foil gradually off the bonding surface of the new seal and bond the seal to the glass panel starting at rear in the centre of the glass panel.

satelettronica

Volkswagen AG. Volkswagen AG does not guarantee or accept any liability with respect to the correctness of information in this document. Copyright by Volkswagen AG. Copying for private or commercial purposes, in part or in whole, is not permitted unless authorised by Volkswagen AG.

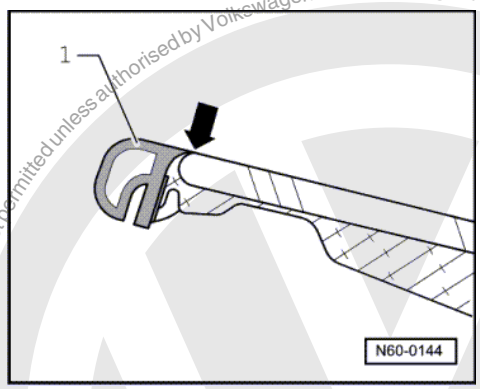

- -> At the top the new glass panel seal -1- must be flush with the edge of the glass panel (arrow).
- The panel seal must be shortened to correspond with the length of the outer edge of the panel.
- Then press the new seal firmly on using a rubber roller.
- Adjusting panel seal => Page 113 .
- Installing sliding/tilting roof glass panel => Page 111 .

1.22 - Removing wind deflector

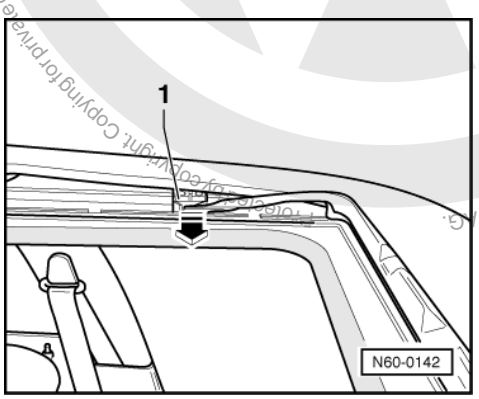

- Sliding/tilting roof completely open.
- -> Carefully lever wind deflector mounting -1- out of guide rail (on left and right) with a screwdriver.
- Take wind deflector out upwards.

1.23 - Removing and installing sliding headlining

Removing sliding headlining

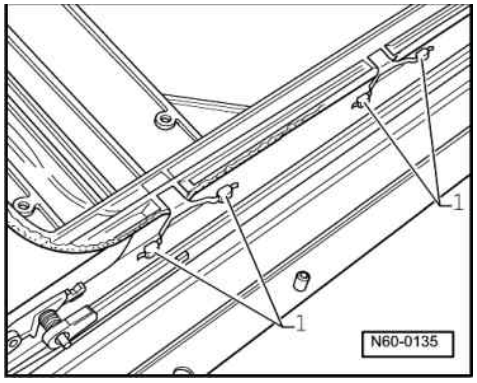

satelettronica

Sliding/tilting roof glass panel removed and sliding/tilting roof unit in "closed position".
- Slide sliding headlining forwards.
- -> Press sliding headlining to one side. Lever slide -1- out of guide channel using a screwdriver (from front to rear).
- Take sliding headlining out upwards.

Installing sliding headlining

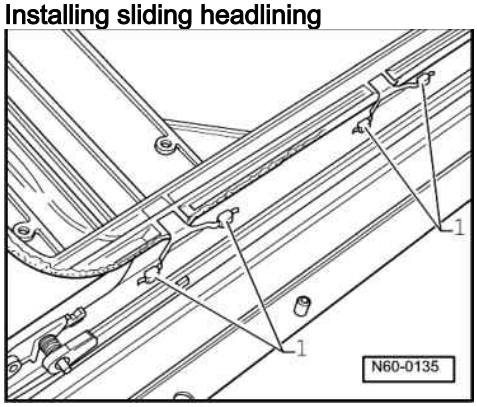

- -> Insert slide headlining into the roof cut-out. Insert slide for sliding headlining in guide channel (slide engaged in sliding headlining) and then insert slide in the guide channel on the opposite side.

1.24 - Removing sliding/tilting sunroof preselector switch

Notes:
- Before disconnecting the battery see the note concerning the coding in the instruction manual for the radio.
- After connecting battery, check vehicle equipment (radio, clock, electric windows) as per Workshop manual and/or Owner's manual.

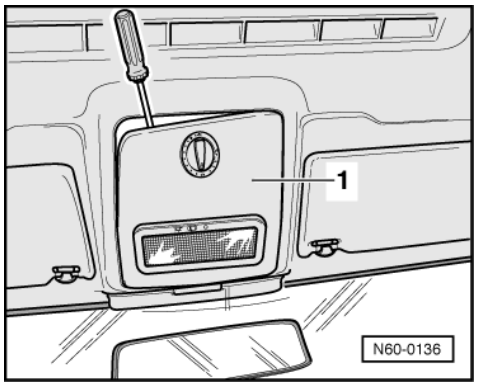

- Disconnect battery earth strap from battery.
- -> Unclip cover -1- for drive.
- Separate connector at the interior light.

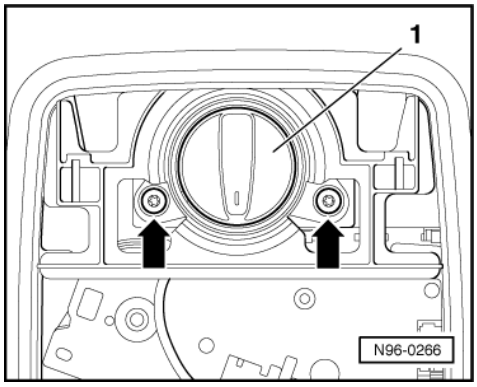

Protected by copyright. Copying for private or commercial purposes, in part or in whole, is not permitted unless authorised by Volkswagen AG. Volkswagen AG does not guarantee or accept any liability with respect to the correctness of information in this document. Copyright by Volkswagen AG.
satelettronica

- -> Remove screws -arrows- and take sunroof control switch -1- out downwards.
- Pull off connector

1.25 - Removing drive for sliding/tilting sunroof

Note:

Remove and install drive for sliding/tilting roof only when roof is closed ("0" position).

- Remove sliding/tilting roof preselector switch => Page 116 .

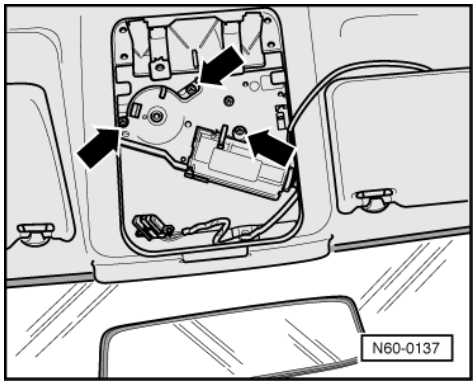

- -> Remove bolts -arrows- and pull out drive for sliding/tilting roof.
- Unclip and separate connector.

The bolts for the drive are micro encapsulated and must always be replaced (3.5 Nm).

1.26 - Adjusting drive for sliding/tilting sunroof ("0" position)

There may be a requirement to adjust the "0" position if the drive was removed when not in "0" position or the sliding/tilting sunroof was closed using the emergency key.

Drive removed but still connected electrically.

- Select "open roof" with preselection control rotary switch.
- Select "close roof" with preselection control rotary switch.
- Select "tilt roof" with preselection control rotary switch.
- Select "close roof" with preselection control rotary switch.
- Install drive in this position ("0" position) with sliding/tilting roof closed.

1.27 - Checking parallel running

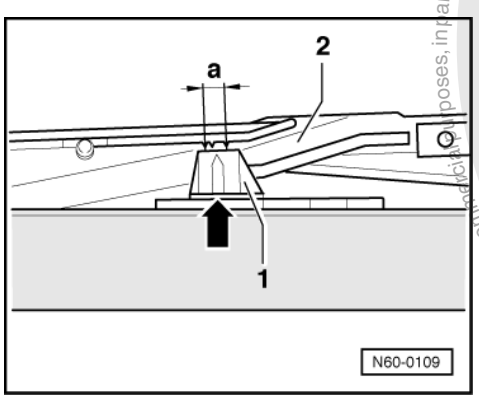

Protected by copyright. Copying for private or commercial purposes, in part or in whole, is not permitted unless authorised by Volkswagen AG. Volkswagen AG does not guarantee or accept any liability with respect to the correctness of information in this document. Copyright by Volkswagen AG.
satelettronica

- Removing trim plates for sliding/tilting sunroof => Page 111 .

Note:

The glass panel must be in the "zero" position (panel closed).

-> The mark -arrow- on the rear of the guide upper section -1- must, on both sides, lie within the marks - dimension a- on the guide rail gate -2-.

The coulisse guide rail -2- must be located in the guide rails (cannot be moved by hand).

1.28 - Adjusting parallel running

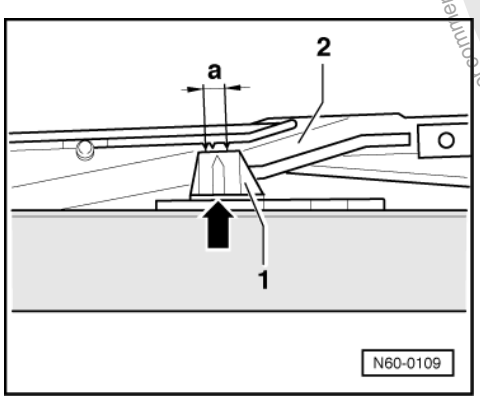

Note:

The parallel running adjustment can only be undertaken when the drive and glass panel are removed ("0" position).

- Removing drive for sliding/tilting sunroof => Page 117 .

-> The mark -arrow- on the rear of the guide upper section -1- must, on both sides, lie within the marks - dimension a- on the guide rail gate -2-.

The coulisse guide rail -2- must be located in the guide rails (cannot be moved by hand).

- Slide guide upper part -1- from front to rear only centrally between the marks.

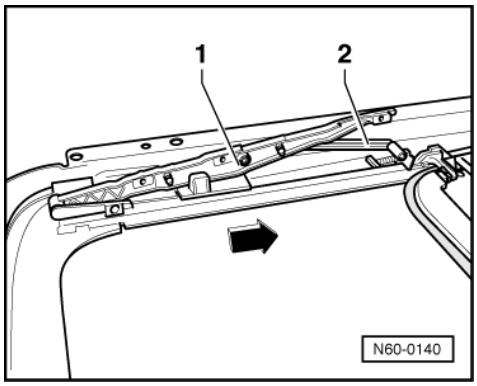

- Install drive in this position ("0" position).

Then check "0" position.

Protected by copyright. Copying for private or commercial purposes, in part or in whole, is not permitted unless authorised by Volkswagen AG. Volkswagen AG does not guarantee or accept any liability with respect to the correctness of information in this document. Copyright by Volkswagen AG.
satelettronica

1.29 - Removing coulisse guide

- Removing glass panel for sliding/tilting sunroof => Page 111 .
- -> Unclip spacer -2- out to side.
- Slide coulisse guide -1- to stop in direction of arrow.

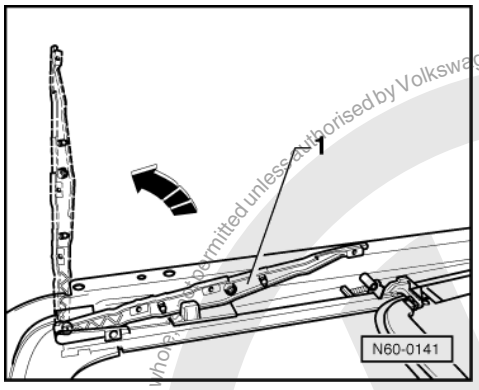

Note:

Ensure correct installation position when installing the spacer -2- (arrow on spacer).

- -> Swing coulisse guide -1- upwards and take out of guide.

Protected by copyright. Copying for private or commercial purposes, in part or in whole, is not permitted unless authorised by Volkswagen AG. Volkswagen AG does not guarantee or accept any liability with respect to the correctness of information in this document. Copyright by Volkswagen AG.
satelettronica

1.30 - Removing and installing carrier unit

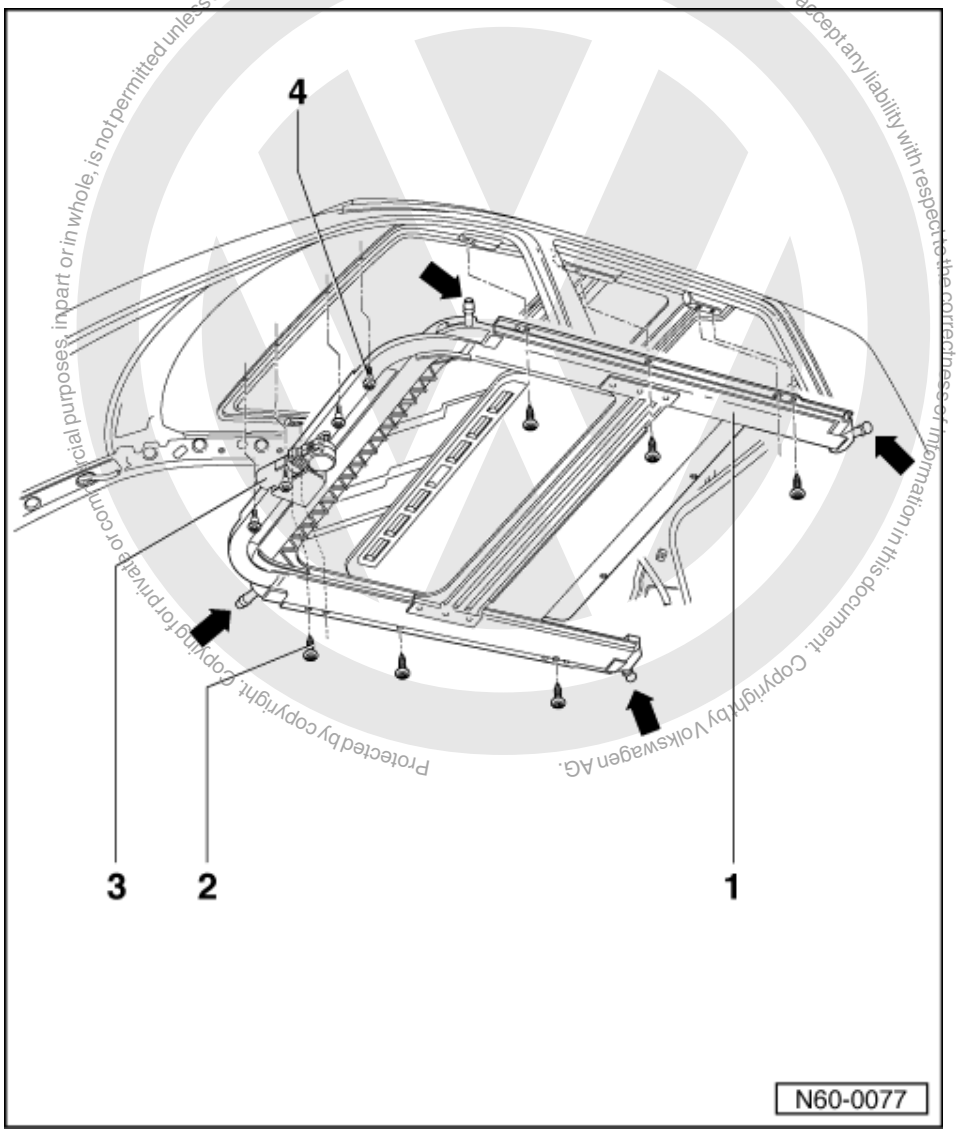

Removing

- For easier installation remove sliding/tilting roof glass panel => Page 111 .
- Remove moulded headlining

=> General body repairs, interior; Repair group 70; Roof trim Roof trim

- Separate connector for drive -3-.
- Pull water drain hoses -arrows- off carrier unit -1-.
- Remove bolts -2- and -4- (with sleeves) and lift carrier unit out of vehicle with help of second mechanic.

satelettronica

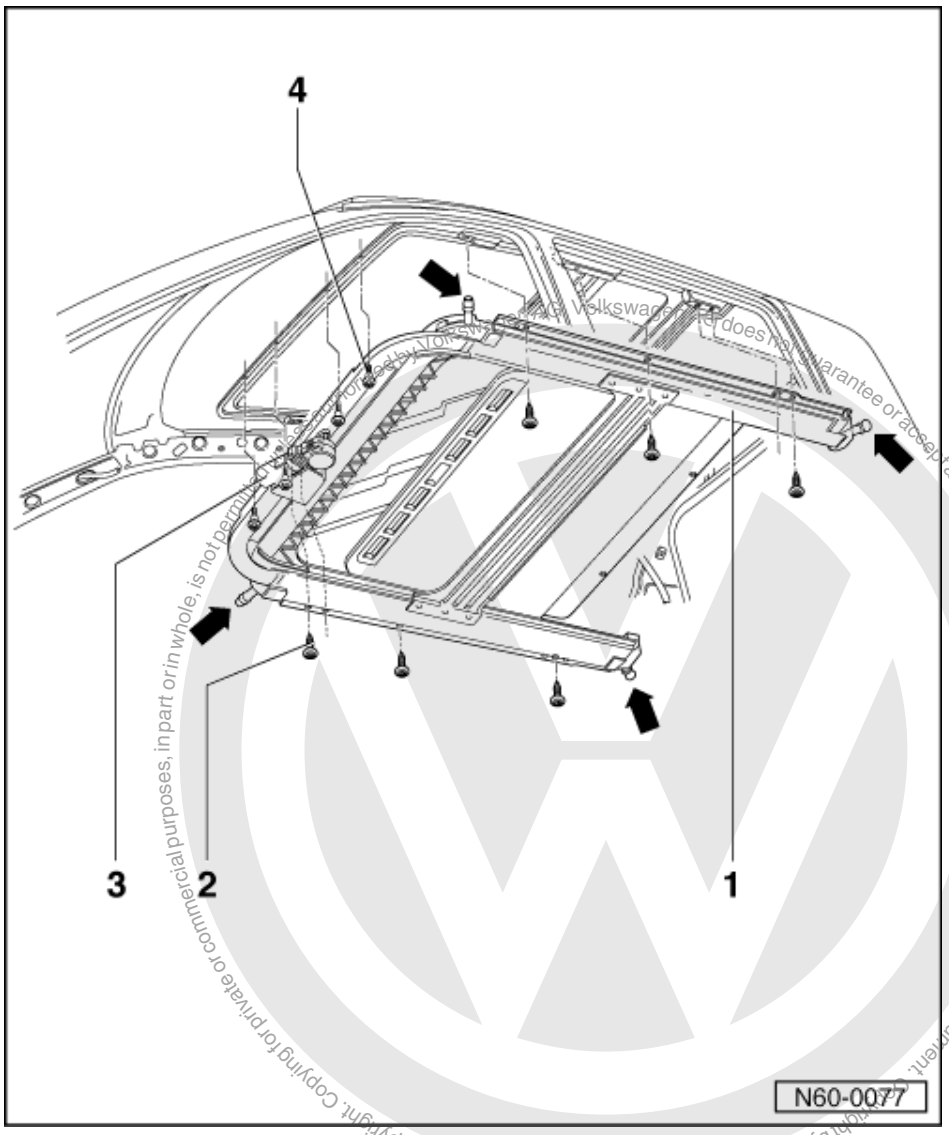

Protected by copyright. Copying for private or commercial purposes, in part or in whole, is not permitted unless authorised by Volkswagen AG. Volkswagen AG does not guarantee or accept any liability with respect to the correctness of information in this document. Copyright by Volkswagen AG.

satelettronica

Installing

- Place carrier unit -1- on the rear mountings and swing upwards (the three fixing pins must locate in the mounting holes).
- Insert screws -2- and -4-.
- Check electrical consumers electrical wiring and connections on roof and reinstate if necessary.
- Tighten carrier unit -1-, starting at sliding/tilting sunroof drive -3- on left and right-hand sides moving rearward (8 Nm).
- Fit connection for drive -3-.

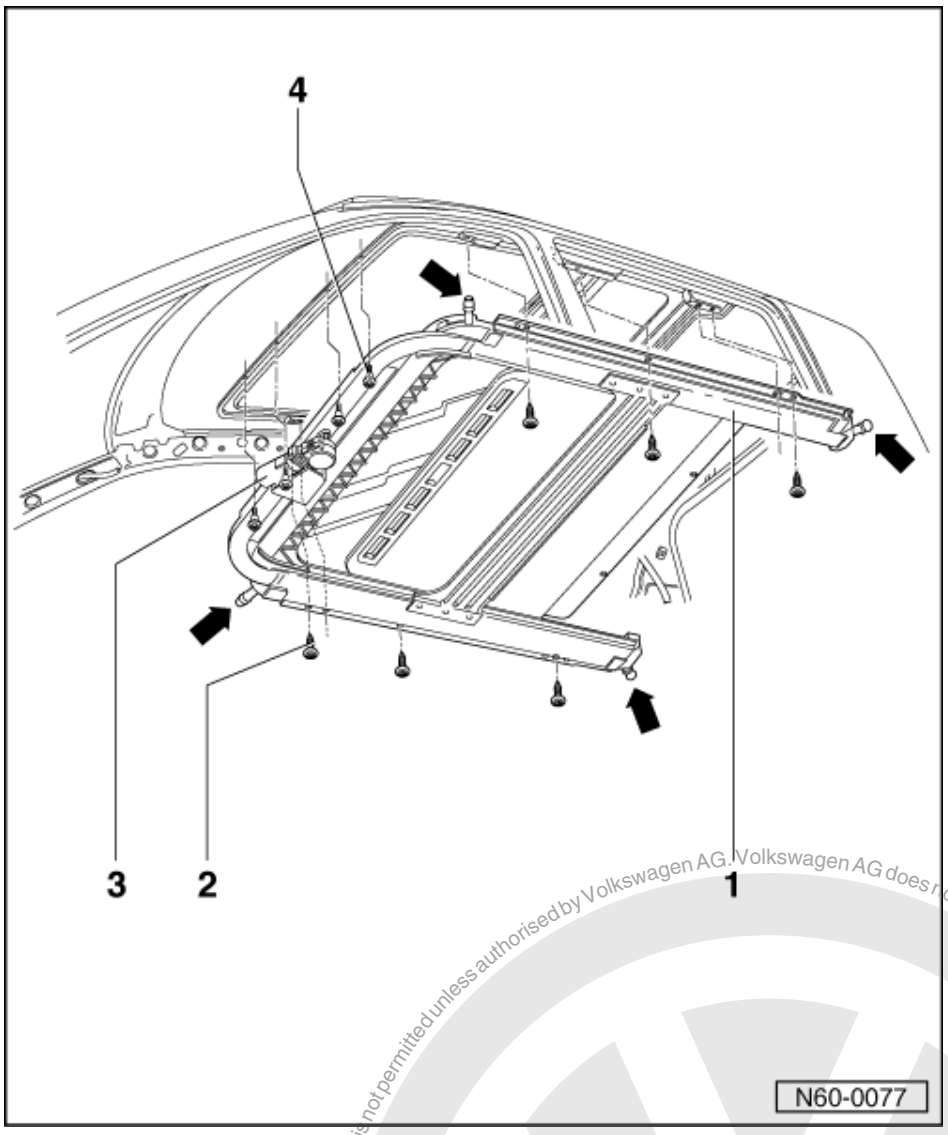

- Fit water drain hoses -arrows-.
- Installing moulded headlining

=> General body repairs, interior; Repair group 70; Roof trim Roof trim

- Install glass panel for sliding/tilting roof => Page 111 .

1.31 - Removing guide and cable

- Removing glass panel for sliding/tilting sunroof => Page 111 .

Protected by copyright. Copying for private or commercial purposes, in part or in whole, is not permitted unless authorised by Volkswagen AG. Volkswagen AG does not guarantee or accept any liability with respect to the correctness of information in this document. Copyright by Volkswagen AG.
satelettronica

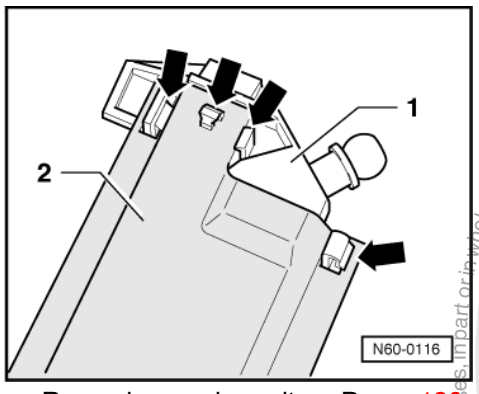

- Removing carrier unit => Page 120 .
- Removing drive for sliding/tilting sunroof => Page 117 .
- -> Unclip end cap -1- -arrows- from guide rail -2- and then pull off.

Note:

When installing, seal end piece -1- to guide rail with Butyl adhesive sealing cord AKL 450 005 05.

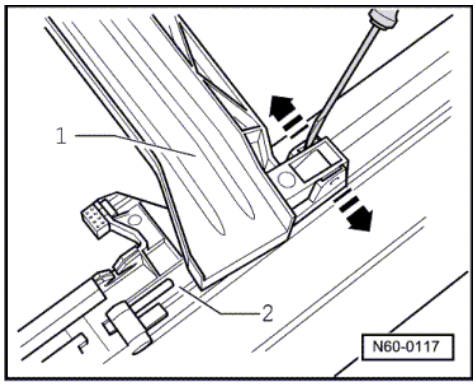

- -> Unclip water channel -1- from locking lug guide -2- on both sides carefully with a screwdriver and take off.

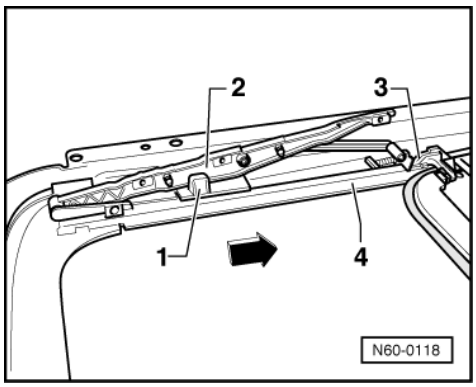

- -> Slide guide and cable -1- in guide rail -4- in direction of arrow until the locking lug guide -3- is released.
- Pull guide and cable -1-, locking lug guide -3- and coulisse guide -2- out of guide rail -4-.

Installation instructions:

- Always renew guides and cable as a pair.
- Lubricate guide channels with special grease G 000 450 02.
- Installing carrier unit =>Page 120 .
- Adjusting parallel running =>Page 118 .
- Installing glass panel for sliding/tilting roof=>Page 111 .

Protected by copyright. Copying for private or commercial purposes, in part or in whole, is not permitted unless authorised by Volkswagen AG. Volkswagen AG does not guarantee or accept any liability with respect to the correctness of information in this document. Copyright by Volkswagen AG.
satelettronica

1.32 - Cleaning water drain hoses

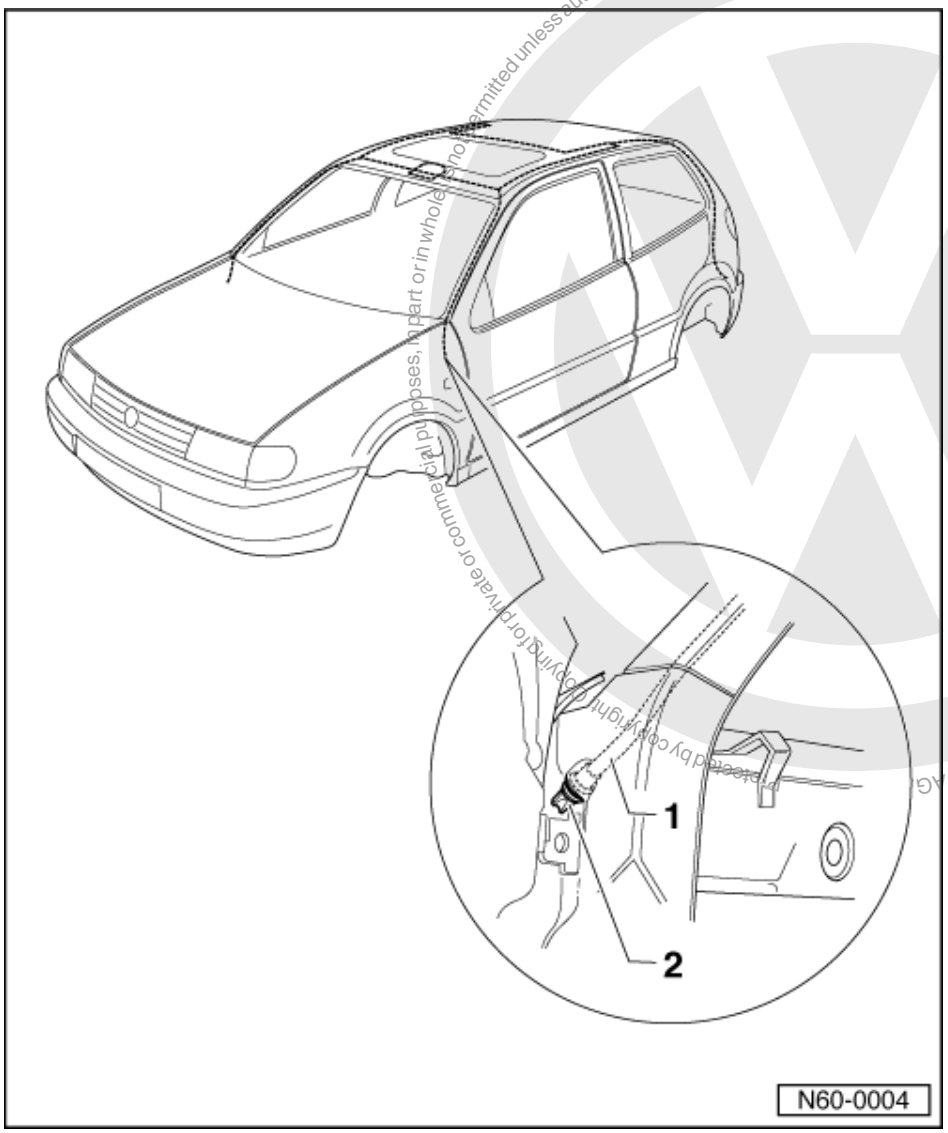

Front water drain hoses:

The front water drain hoses -1- are routed in the "A pillars" and end between door and A pillar. Cleaning is done from the sliding/tilting roof panel aperture.

1 - Water drain hose

2 - Water drain valve

Note:

For cleaning a locally manufactured tool made from a speedometer inner cable, approx. 2300 mm long is recommended.

Copyright by Volkswagen AG. Volkswagen AG does not guarantee or accept any liability with respect to the correctness of information in this document. Copyright by Volkswagen AG. Reproduced by copyright copying for private or commercial purposes, in part or in whole, is not permitted unless authorised by Volkswagen AG.
satelettronica

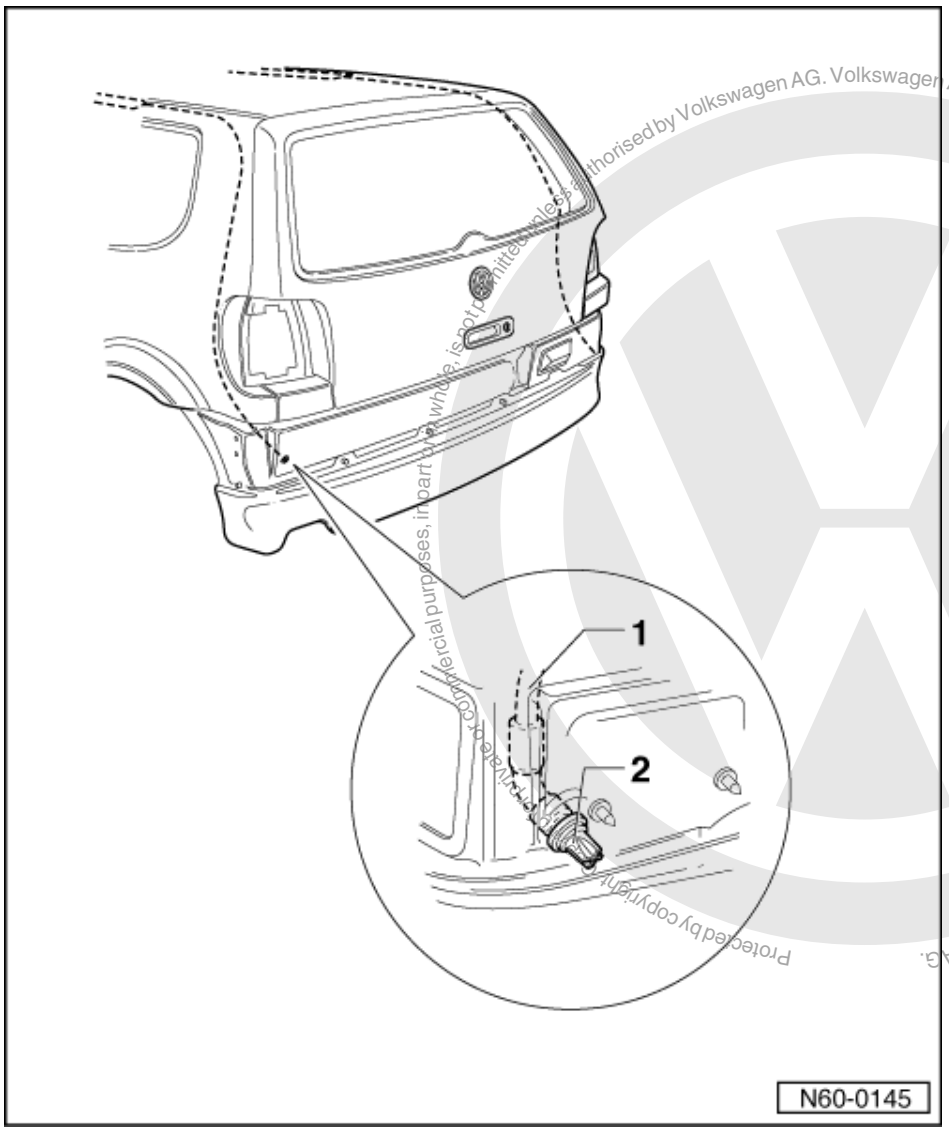

Protected by copyright. Copyright by Volkswagen AG. Volkswagen AG does not guarantee or accept any liability with respect to the correctness of information in this document. Copyright by Volkswagen AG.
satelettronica

Rear water drain hoses:

The rear water drain hoses -1- are routed in the "C pillars" and end behind the bumper cover. Cleaning is performed from the lower end of the hose. To do this, the bumper must be removed.

1 - Water drain hose

2 - Water drain valve

Note:

For cleaning, a locally manufactured tool made from a speedometer inner cable, approx. 2300 mm long, is recommended.

2 - Fabric folding roof

2.1 - Fabric folding roof

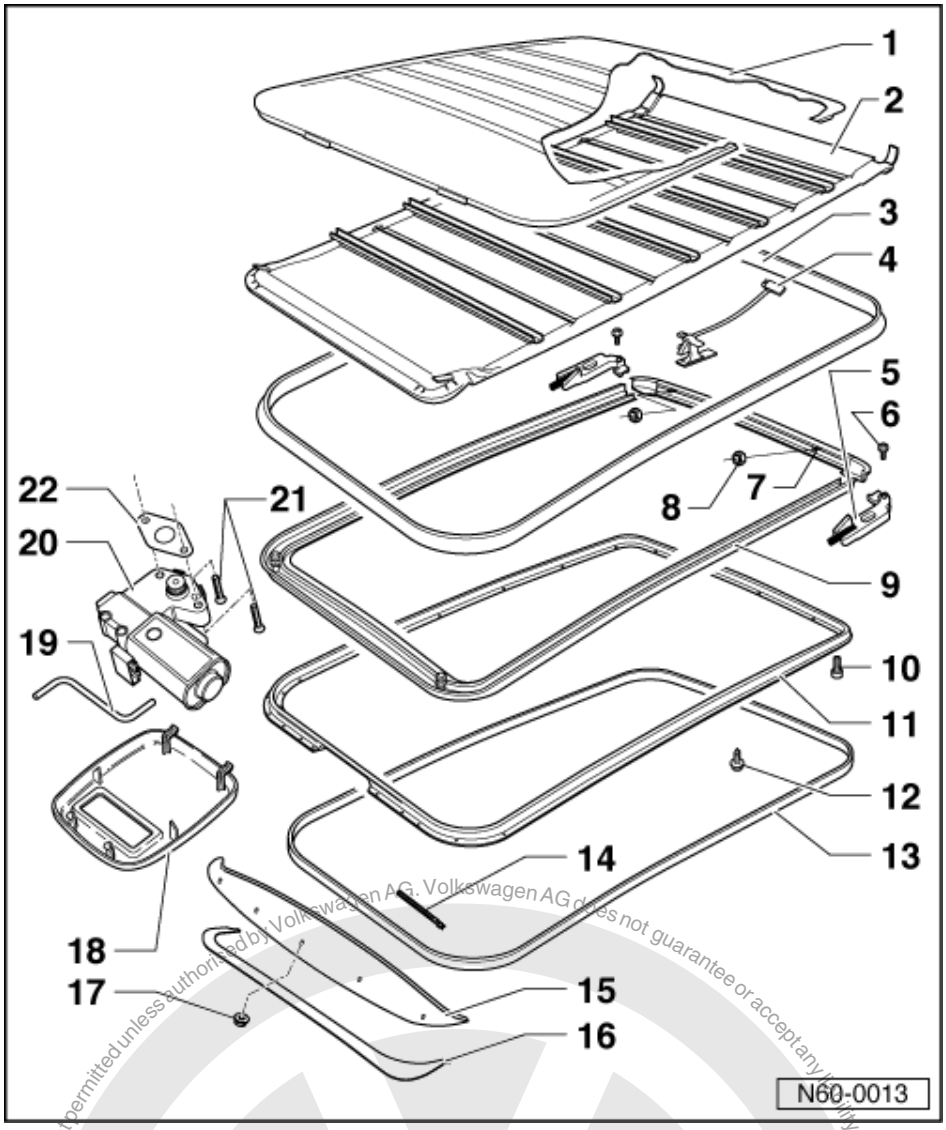

2.2 - Fabric folding roof assembly overview

1 Cover
- Removing and installing => Page 130 .

2 Trim
- Removing and installing => Page 130 .

3 Seal
- To renew, remove fabric folding roof.

4 Slide
- To renew, remove fabric folding roof with cover and trim => Page 130 .

Protected by copyright. Copying for private or commercial purposes, in part or in whole, is not permitted unless authorised by Volkswagen AG. Volkswagen AG does not guarantee or accept any liability with respect to the correctness of information in this document. Copyright by Volkswagen AG.

satelettronica

Protected by copyright. Copyright by Volkswagen AG. Volkswagen AG does not guarantee or accept any liability with respect to the correctness of information in this document. Copying for private or commercial purposes, in part or in whole, is not permitted unless authorised by Volkswagen AG.

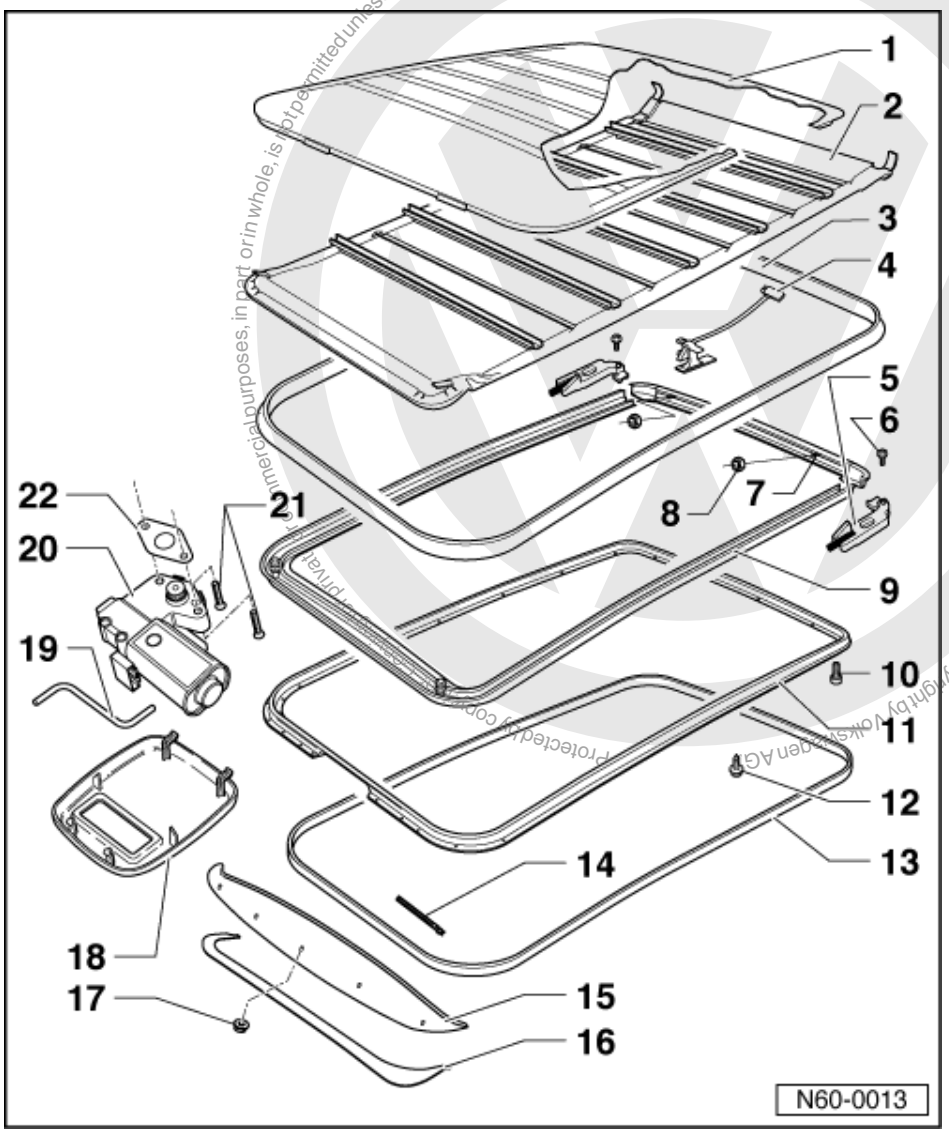

5 Connecting piece
6 Countersunk screws
- 3.5 Nm

7 Threaded pin
- To secure and adjust fabric folding roof

8 Hexagon nut
- Self-locking

9 Frame
10 Torx screw T25
- Metric thread: centralizes fabric folding roof
- 3.5 Nm

11 Clamping frame

satelettronica

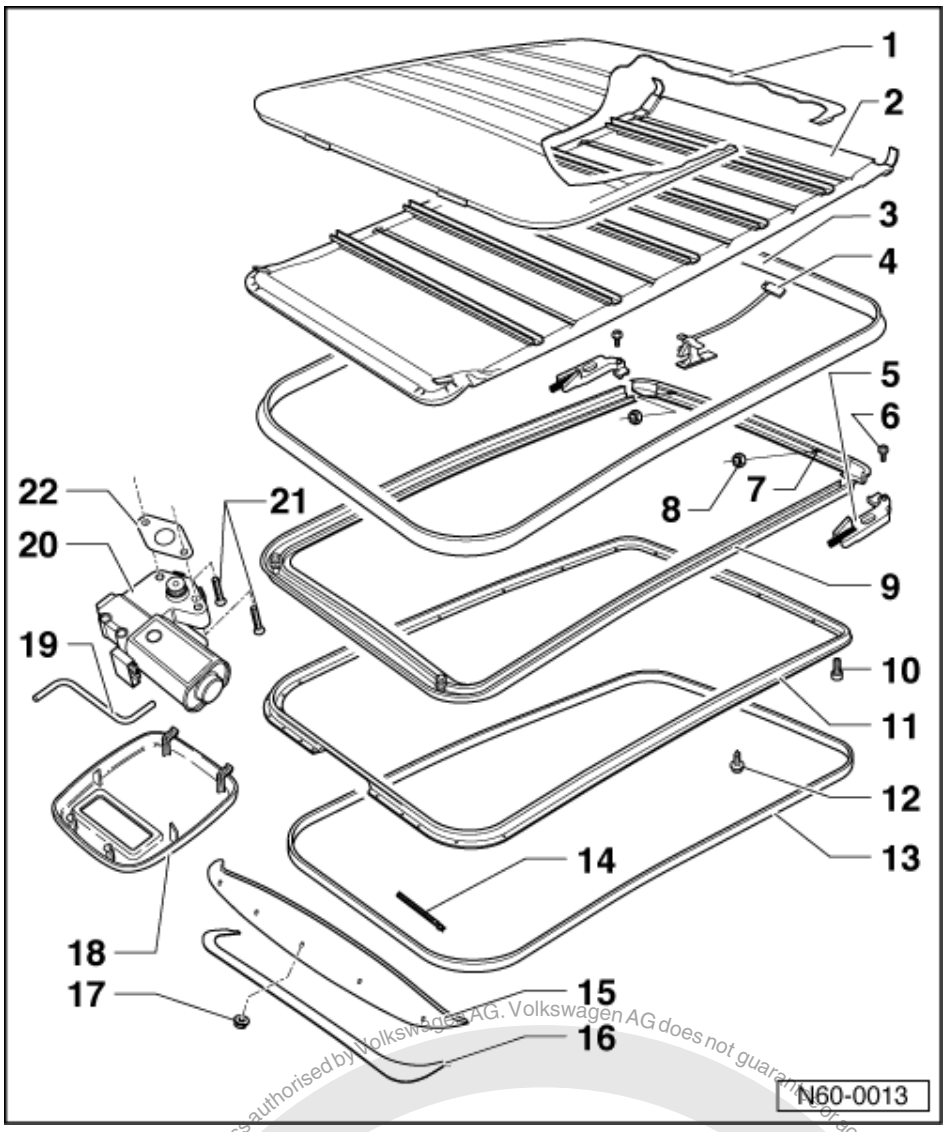

12 Torx screw T25
- Self-cutting thread
- 3.5 Nm

13 Channel

14 Trim

15 Roof spoiler

16 Protective foil
- Self-bonding

17 Hexagon nut
- 3 Nm

18 Cover

19 Hexagon key for emergency operation
- Clipped into electric drive

satelettronica
Protected by copyright. Copying for private or commercial purposes, in part or in whole, is not permitted unless authorised by Volkswagen AG. Volkswagen AG does not guarantee or accept any liability with respect to the correctness of information in this document. Copyright by Volkswagen AG.

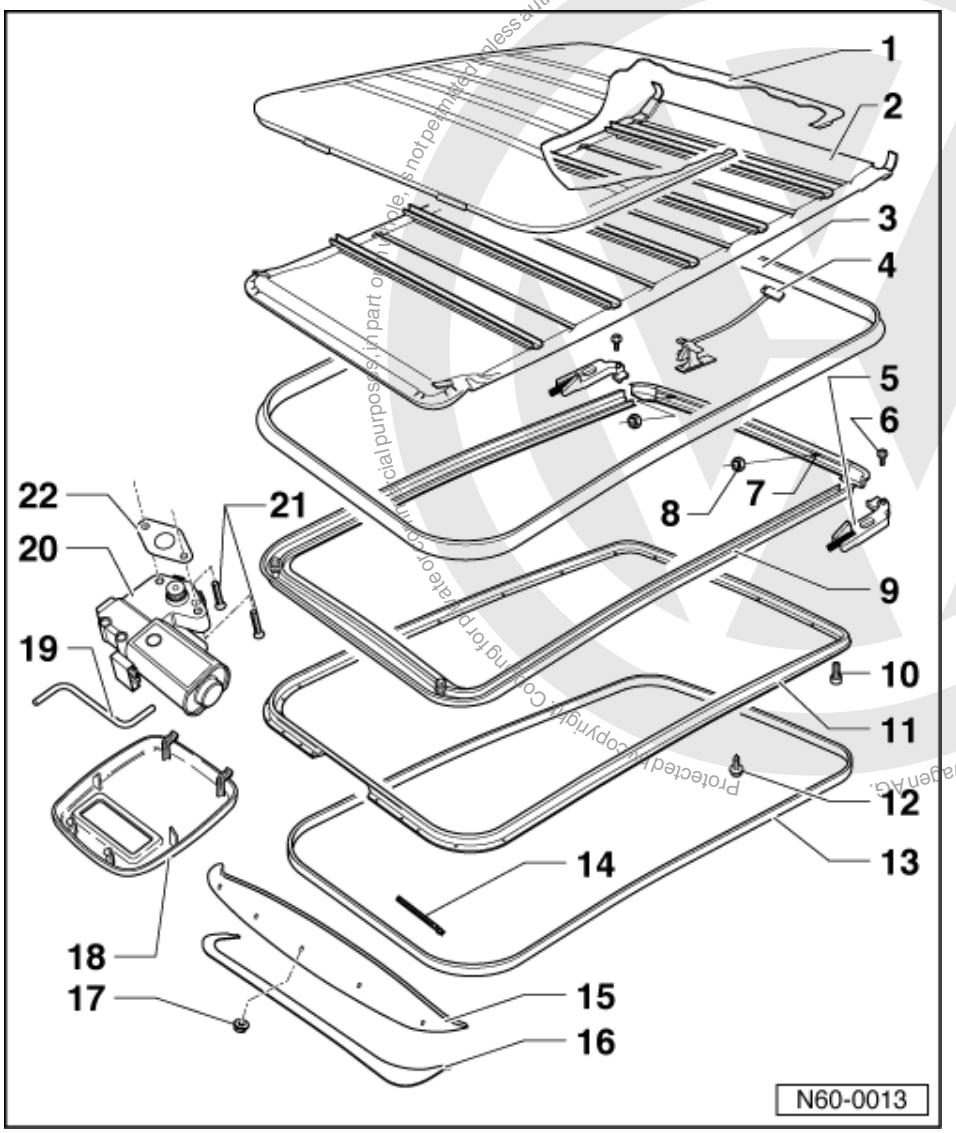

20 Electric drive

21 Countersunk screws (micro encapsulated)

- Always use new countersunk screws
- 3.5 Nm

22 Seal

Protected by copyright. Copying for private or commercial purposes, in part or in whole, is not permitted unless authorised by Volkswagen AG. Volkswagen AG does not guarantee or accept any liability with respect to the correctness of information in this document. Copyright by Volkswagen AG.
satelettronica

2.3 - Removing and installing fabric folding roof complete

Removing

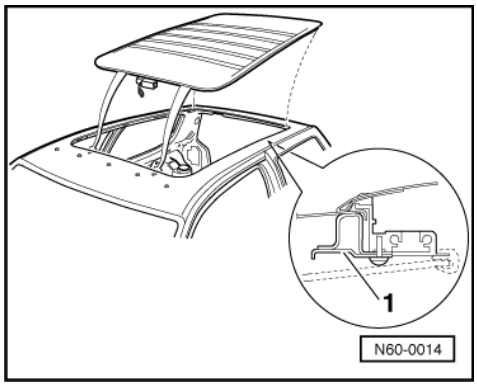

- Remove moulded headlining.

=> General body repairs, interior; Repair group 70; Roof trim; Removing and installing moulded headlining Roof trim Removing and installing moulded headlining

- Separate connection on cable drive.
- Open fabric folding roof approx. 50 mm.
- -> Remove clamping frame -1- (24 x Torx T 25).
- Pull fabric folding roof with frame upwards out from roof cut-out.

Installing

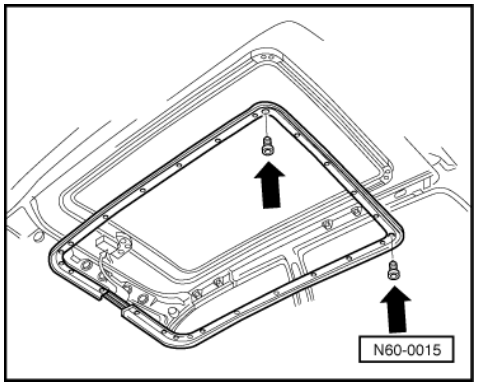

- Insert fabric folding roof into roof cut-out.
- -> Screw clamping frame onto fabric folding roof (centralize clamping frame in rear corners with both metric torx screws -arrows- then bolt-on from rear, forwards).

2.4 - Removing and installing folding roof with cover and trim panel

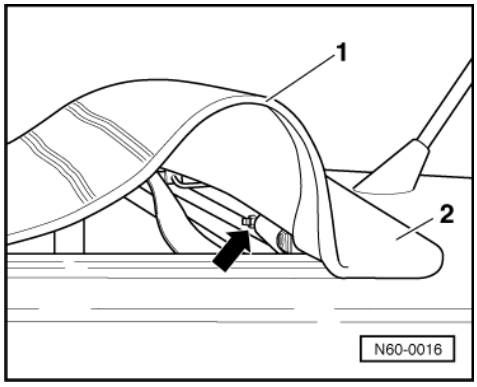

Protected by copyright. Copying for private or commercial purposes, in part or in whole, is not permitted unless authorised by Volkswagen AG. Volkswagen AG does not guarantee or accept any liability with respect to the correctness of information in this document. Copyright by Volkswagen AG.
satelettronica

- -> Open fabric folding roof approx. 100 mm and pull rearmost roof fold upwards -1-.
- Remove hexagon nuts -arrow- from studs.
- Pull fabric folding roof end -2- off rear clamping rail.

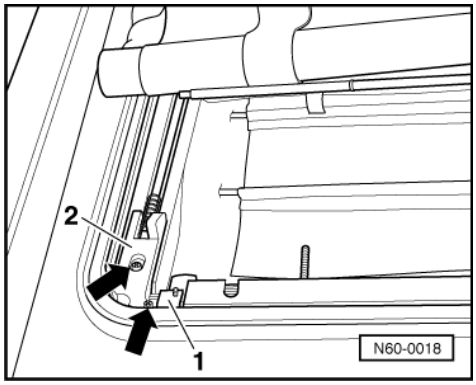

- -> Remove oval head bolts -arrows-, remove retaining plate -1- from connecting piece -2-. Pull connecting piece off fabric folding roof frame. This sequence must be carried out on both sides of fabric folding roof.

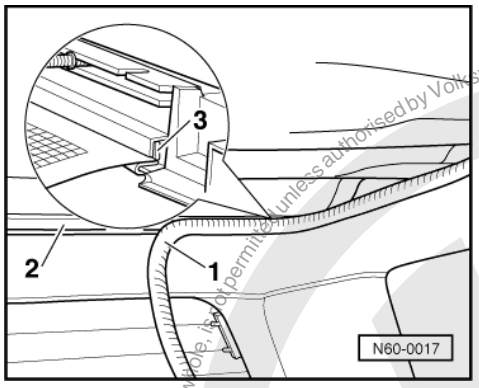

- -> Pull beading -1- in rear area off.
- Pull fabric folding roof trim -2- out from rear clamping rail -3-.

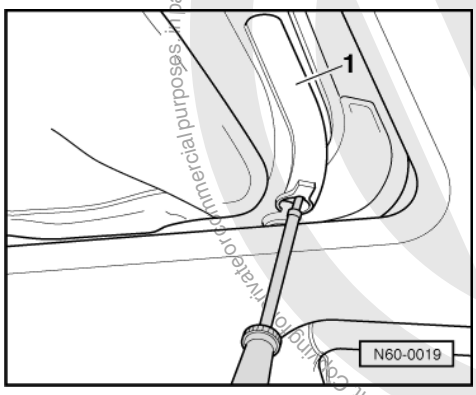

- -> Press left and right-hand slide covers -1- off cable guide with a screwdriver and pull out from fabric folding roof end.

Protected by copyright. Copying for private or commercial purposes, in part or in whole, is not permitted unless authorised by Volkswagen AG. Volkswagen AG does not guarantee or accept any liability with respect to the correctness of information in this document. Copyright by Volkswagen AG.
satelettronica

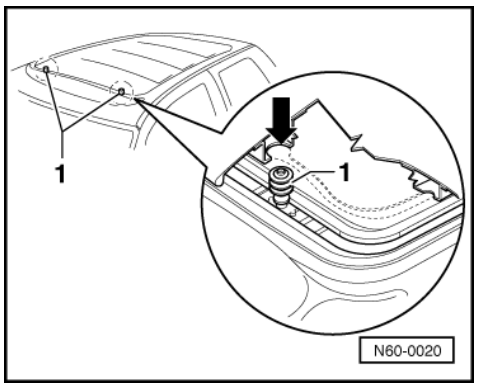

- -> Close fabric folding roof. In this position the cable guides -1- slide out from fabric folding roof slide -arrow-. If this is not so, then open or close the fabric folding roof a few millimetres.
- Press fabric folding roof end upwards off cable guides.

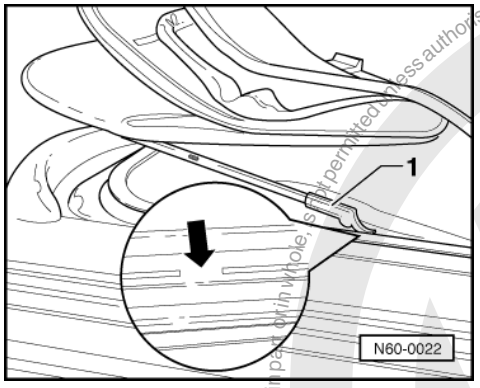

- -> Pull fabric folding roof forwards until the retainer -1- is in area of guide rail cut-out -arrow-.
- Pull fabric folding roof end with retainers -1- out from guide rails.

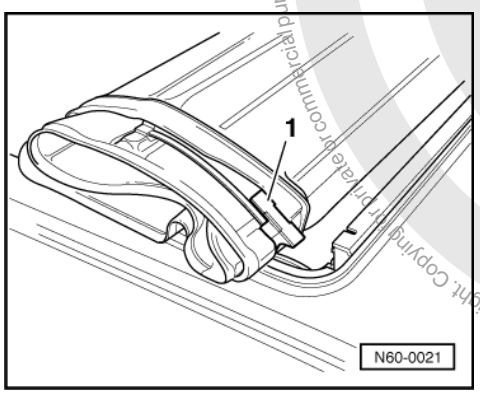

- -> Slide fabric folding roof to rear until the left and right-hand guides of the forward slide -1- are free (roll-up fabric folding roof to forward slides at same time as sliding back).

Protected by copyright. Copying for private or commercial purposes, in part or in whole, is not permitted unless authorised by Volkswagen AG. Volkswagen AG does not guarantee or accept any liability with respect to the correctness of information in this document. Copyright by Volkswagen AG.
satelettronica

2.5 - Renewing fabric folding roof cover or trim panel

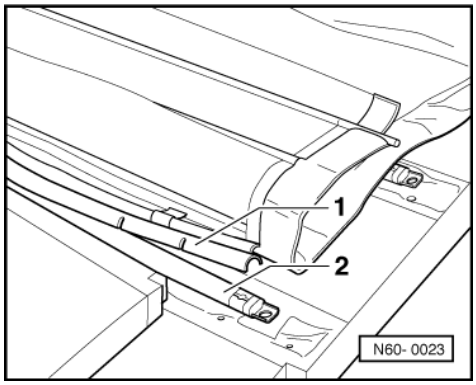

To do this, remove fabric folding roof with cover and trim first.

- -> Pull clamping strips -1- off cross pieces -2- and roll up fabric folding roof trim.

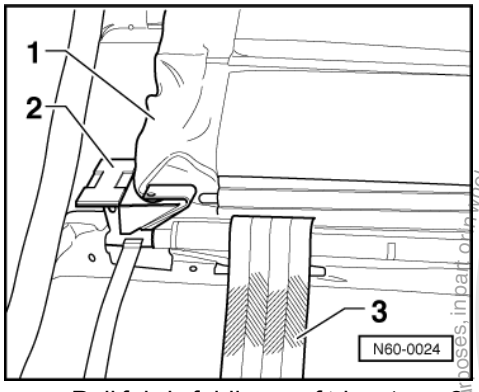

- -> Pull fabric folding roof trim -1- on 2nd and 4th cross pieces off slides (fabric folding roof trim has no pockets in this area).

The band -3- is guided over the 2nd and 4th cross pieces.

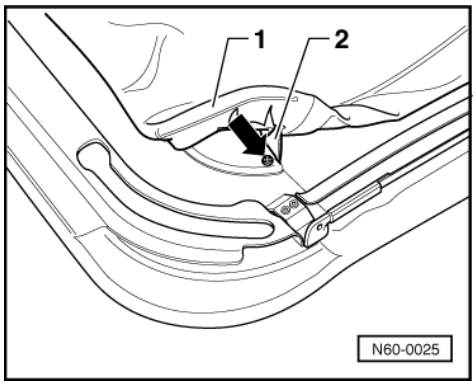

- -> Pull fabric folding roof trim -1- off fabric folding roof end and unbolt -arrow- left and right-hand tensioning rubber -2-.

After the fabric folding roof upper part (cover) and fabric folding roof lower part (trim) are separated, then they can be renewed.

Protected by copyright. Copying for private or commercial purposes, in part or in whole, is not permitted unless authorised by Volkswagen AG. Volkswagen AG does not guarantee or accept any liability with respect to the correctness of information in this document. Copyright by Volkswagen AG.
satelettronica

2.6 - Tensioning fabric folding roof

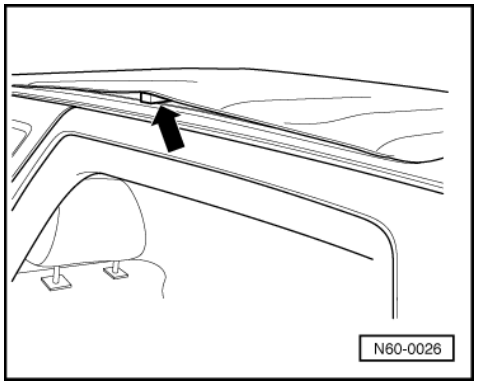

-> If the fabric folding roof cover can be lifted -arrow- at the sides on the frame with roof closed or cannot be closed under electric motor power then the fabric folding roof must be tensioned or eased.

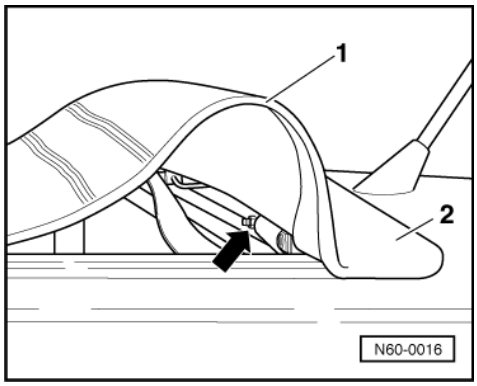

- -> Open fabric folding roof -2- approx. 100 mm and pull rearmost roof fold upwards -1-.
- Tighten or unscrew hexagon nuts -arrow- (Qty. 2) on studs evenly.
- Close fabric folding roof. The tension is OK if the fabric folding roof cover lies against the frame under light tension and closes fault free.

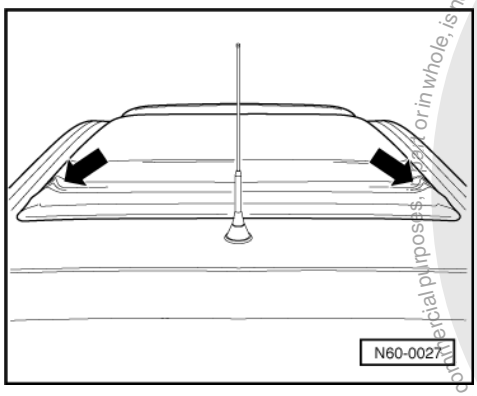

-> If fabric folding roof sides, even when correctly adjusted curl upwards then the belt tension must be corrected.

Protected by copyright. Copying for private or commercial purposes, in part or in whole, is not permitted unless authorised by Volkswagen AG. Volkswagen AG does not guarantee or accept any liability with respect to the correctness of information in this document. Copyright by Volkswagen AG.
satelettronica

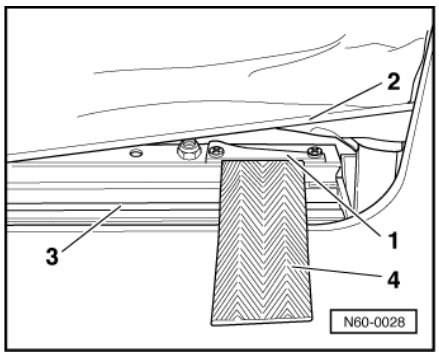

- -> Pull beading off in area of rear roof cut-out.
- Pull fabric folding roof trim -2- out from rear clamping rail -3-.
- Loosen clamping strip -1- for belt -4- and release belt tension until roof sides do not curl up with fabric roof closed.

2.7 - Checking parallel running

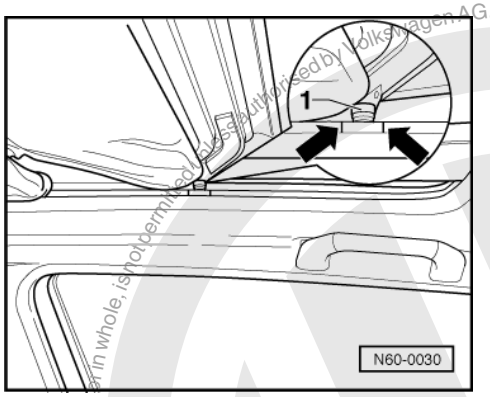

- -> Open fabric folding roof until one or both cable guides -1- are in the grooves -arrows-. If both cable guides -1- are not within the grooves then adjust parallel running.

2.8 - Adjusting parallel running

- Remove electric drive cover.
- Remove electric drive unit. Always use new screws (securing screws are micro-encapsulated) 3 Nm.

Note:

The drive pinion must no longer be in mesh with the cables.

- Slide both cable guides only from front to rear between grooves -arrows-.
- Remove electric drive cable guides in this position.

2.9 - Renewing roof spoiler

- Open fabric folding roof and pull off beading in forward area.
- Lower roof lining in forward area.

Protected by copyright. Copying for private or commercial purposes, in part or in whole, is not permitted unless authorised by Volkswagen AG. Volkswagen AG does not guarantee or accept any liability with respect to the correctness of information in this document. Copyright by Volkswagen AG.
satelettronica

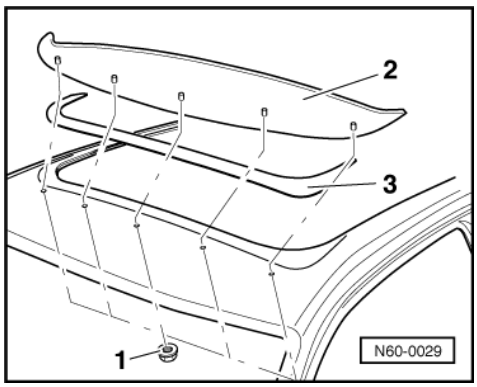

=> General body repairs, interior; Repair group 70; Roof trim; Removing and installing moulded headlining Roof trim Removing and installing moulded headlining

- -> Remove hexagon nuts -1- (3 Nm) and pull off roof spoiler -2-.

If film -3- is to be renewed then remove fabric folding roof complete.

Stick on film -3- from right to left of roof cut-out.

Protected by copyright. Copying for private or commercial purposes, in part or in whole, is not permitted unless authorised by Volkswagen AG. Volkswagen AG does not guarantee or accept any liability with respect to the correctness of information in this document. Copyright by Volkswagen AG.

satelettronica

63 - Bumpers

1 - Front bumper >09.99

1.1 - Front bumper >09.99

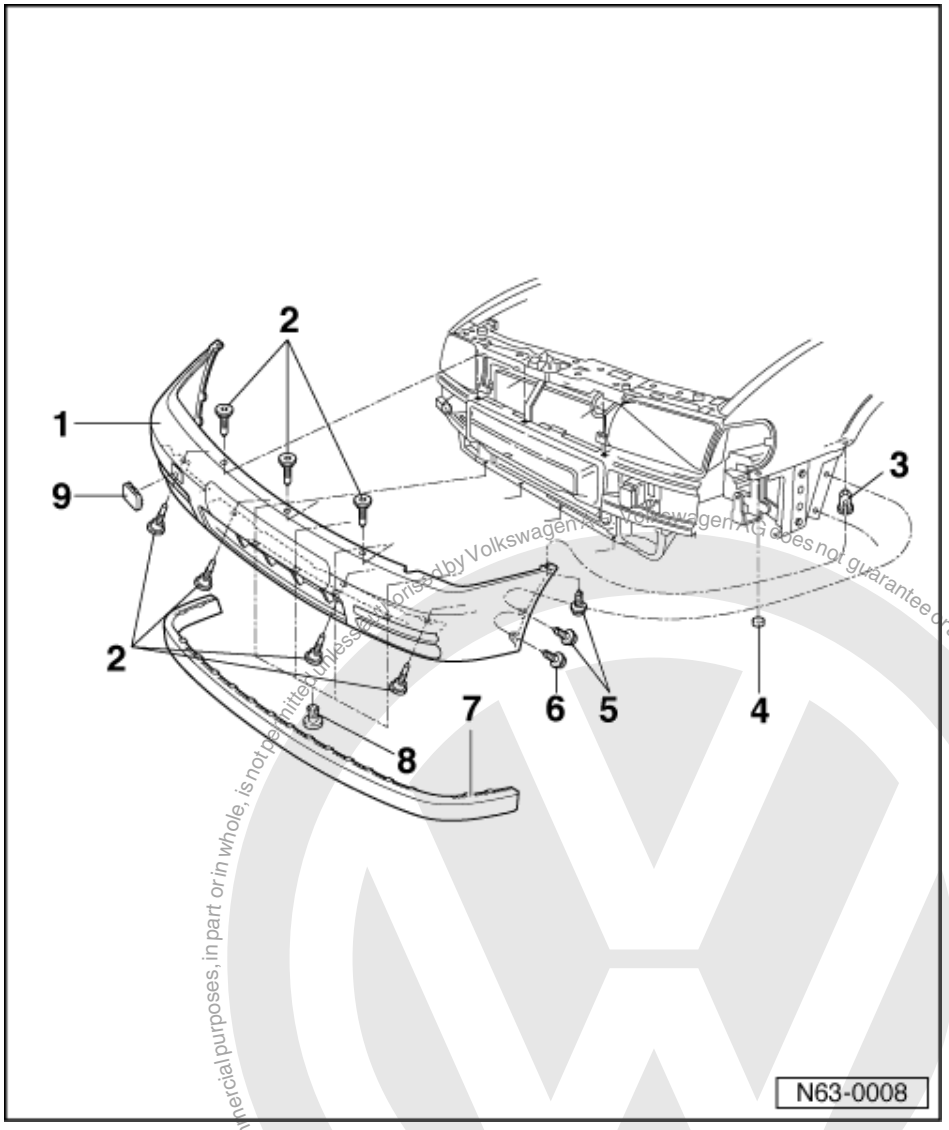

1.2 - Assembly overview

1 Cover
- Material: PP/EPDM
- Removing and installing cover => Fig. 138

2 Torx screw T 30
- 6 Nm (Qty. 7)

3 Spreader nut

4 Buffer

5 Screw
- 1.5 Nm (Qty. 4)

satelettronica
Protected by copyright. Copying for private or commercial purposes, in part or in whole, is not permitted unless authorised by Volkswagen AG. Volkswagen AG does not guarantee or accept any liability with respect to the correctness of information in this document. Copyright by Volkswagen AG.

6 Screw - only for large bumper
- 1.5 Nm (Qty. 2)

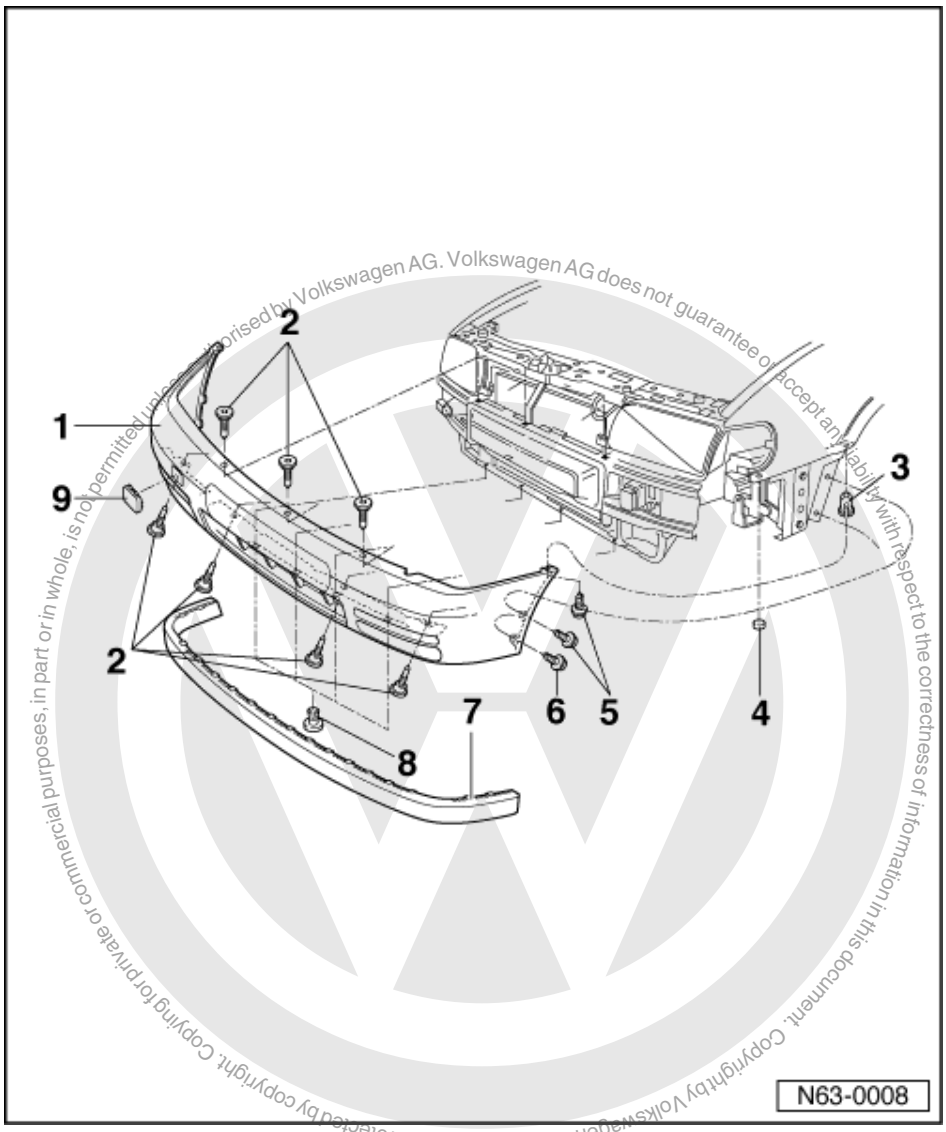

7 Spoiler
- Clipped into cover
- Is not necessary to remove when removing the cover

8 Spreader rivet - only for large bumper
- (Qty. 4)

9 Towing eye cover

Removing and installing cover

- Remove radiator grille with trim frame =>Page 186 .

Protected by copyright. Copying for private or commercial purposes, in part or in whole, is not permitted unless authorised by Volkswagen AG. Volkswagen AG does not guarantee or accept any liability with respect to the correctness of information in this document. Copyright by Volkswagen AG.

satelettronica

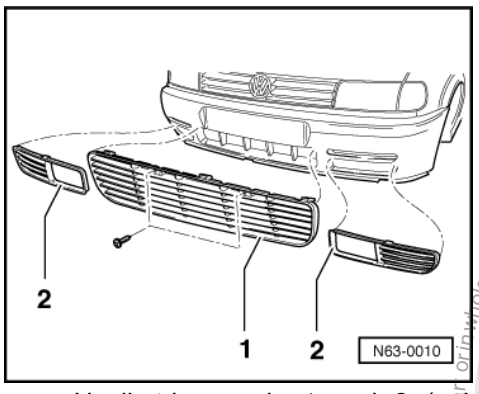

- -> Unclip trim panels -1- and -2- (only large bumper). Trim panel -1- is additionally bolted.
- Remove Torx bolts T30 (Qty. 7).
- Loosen securing devices to wheel housing lining and wing and pull bumper cover off.

Protected by copyright. Copying for private or commercial purposes, in part or in whole, is not permitted unless authorised by Volkswagen AG. Volkswagen AG does not guarantee or accept any liability with respect to the correctness of information in this document. Copyright by Volkswagen AG.
satelettronica

2 - Front bumper 10.99 >

2.1 - Front bumper 10.99 >

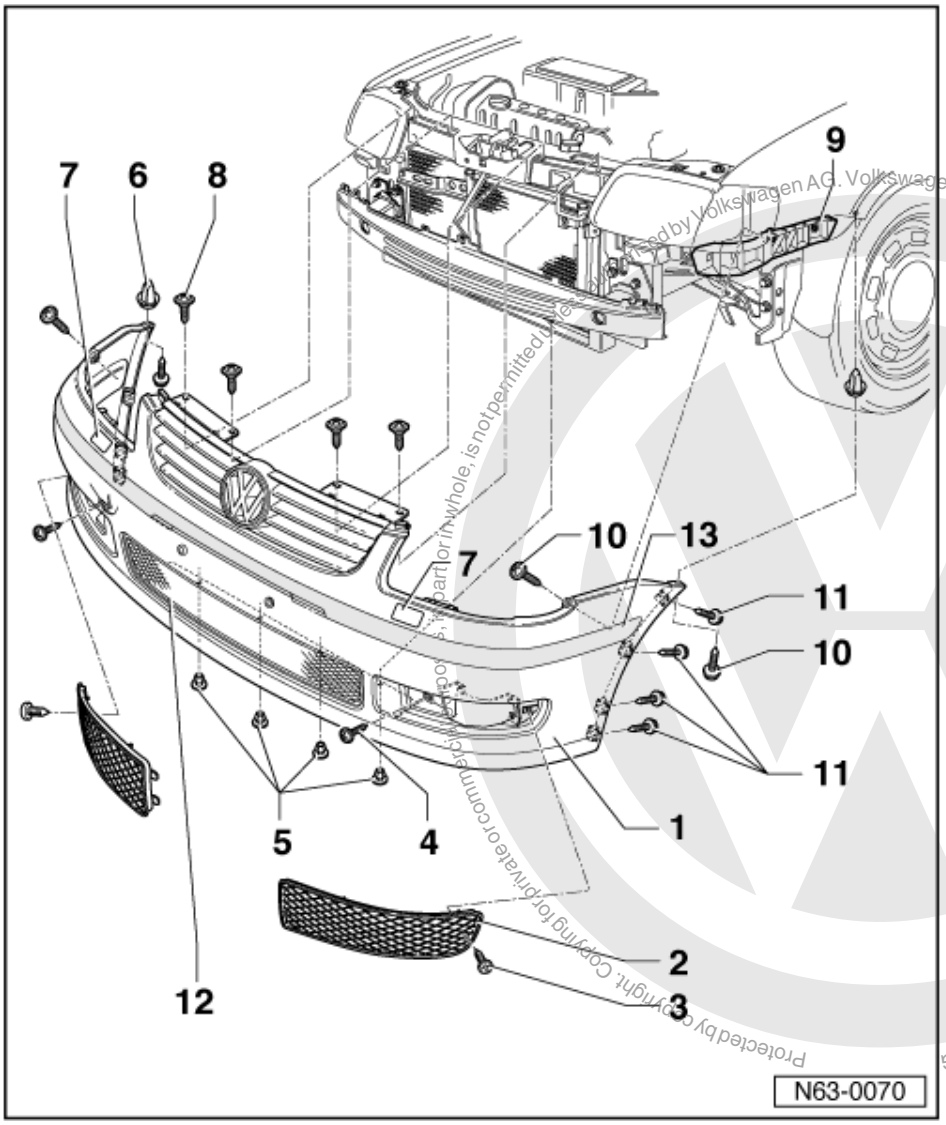

2.2 - Bumper cover - Assembly overview

Note:

- Depending on the model, it is possible that slight changes to the removal and installing procedures may be necessary.

1 Cover
- Material: PP/EPDM
- Removing: => Page 143

2 Air guide grille
- side air guide grille, screwed and clipped

3 Screw
- 2 Nm

4 Screw

Protected by copyright. Copying for private or commercial purposes, in part or in whole, is not permitted unless authorised by Volkswagen AG. Volkswagen AG does not guarantee or accept any liability with respect to the correctness of information in this document. Copyright by Volkswagen AG
satelettronica

- Qty. 2
- 2.5 Nm

5 Spreader clip
- Qty. 4

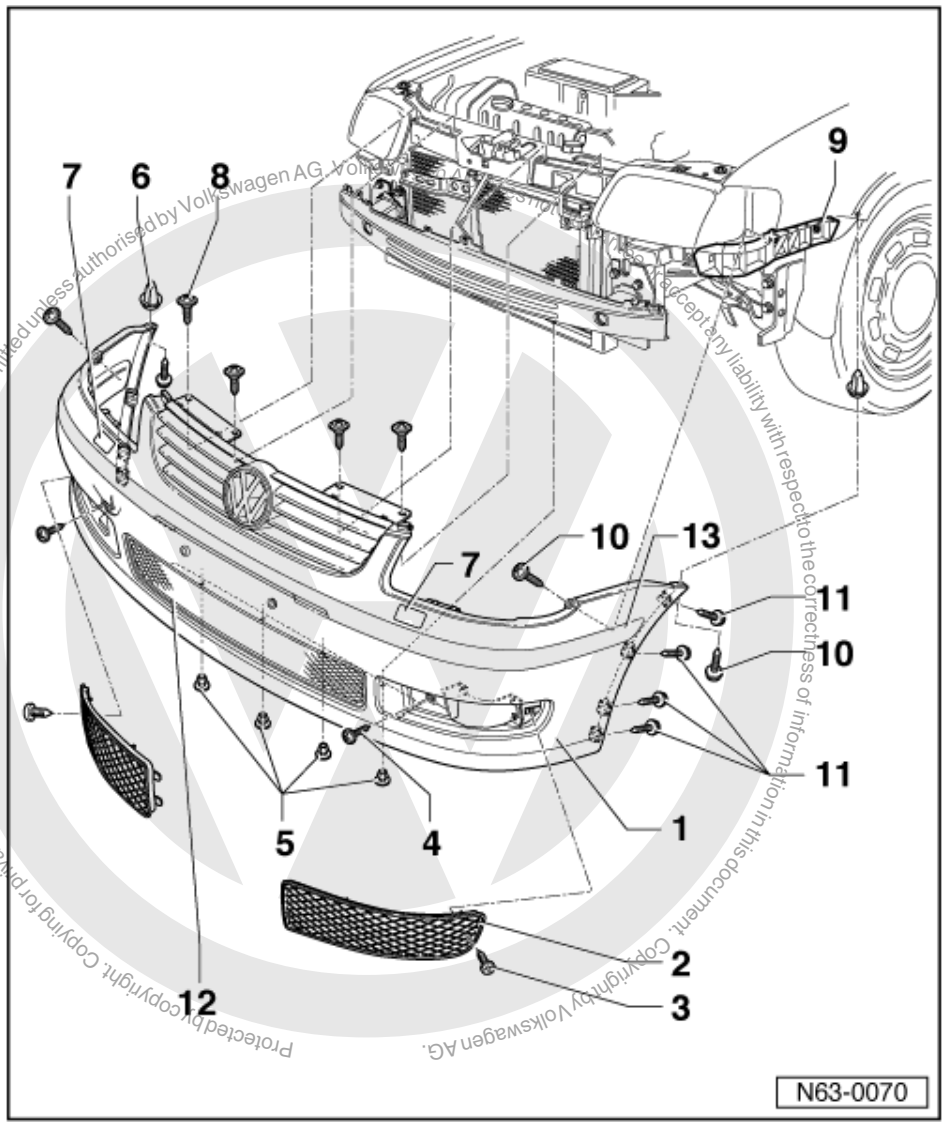

6 Spreader nut
- Qty. 2

7 Cover for headlight washer system
- The cover is clipped into the washer jet of the headlight washer system

8 Screw
- Qty. 4
- 2.5 Nm

9 Guide
- To remove/install bumper, pull out or push in parallel to guides at left and right.

10 Screw
- Qty. 4
- 1.2 Nm

satelettronica

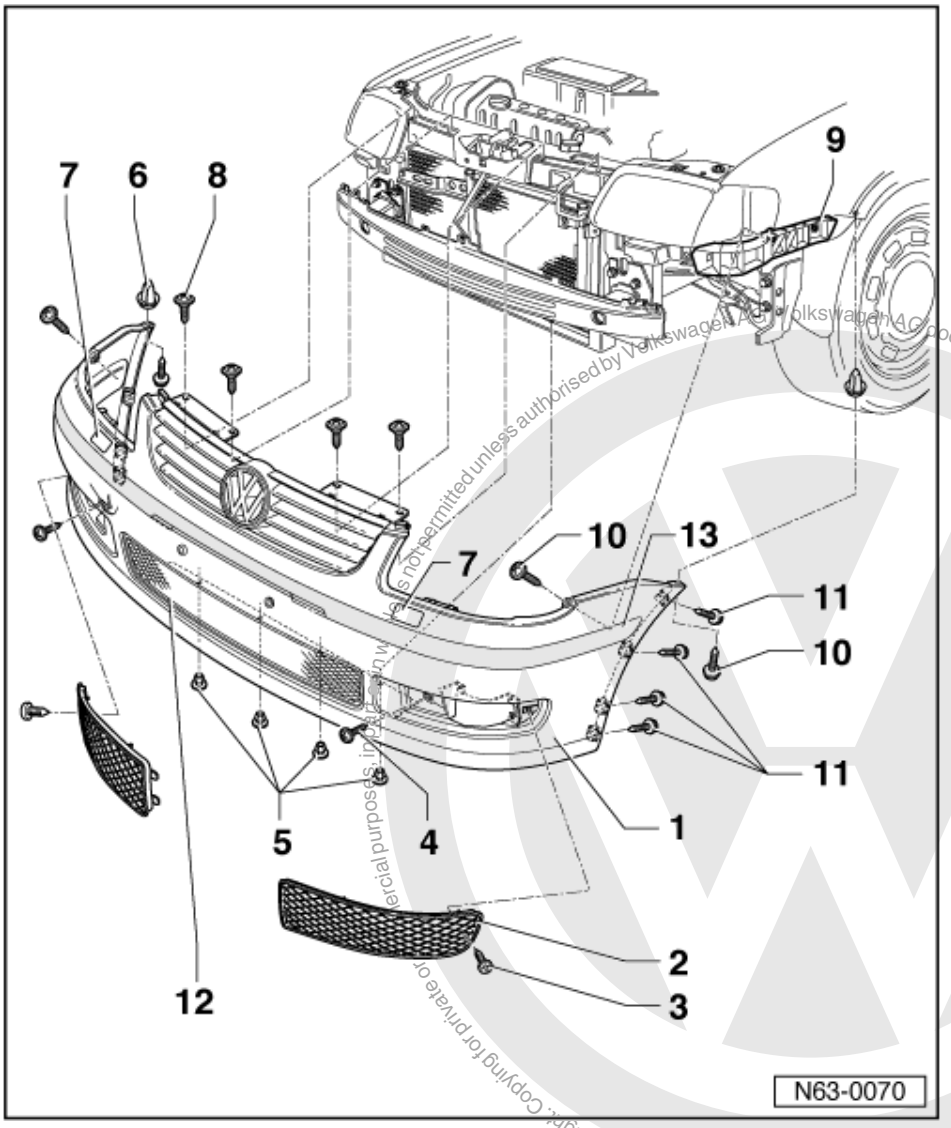

Protected by copyright. Copying for private or commercial purposes, in any form or by any means is not permitted unless authorised by Volkswagen AG. Volkswagen AG does not guarantee or accept any liability with respect to the correctness of information in this document. Copyright by Volkswagen AG.

satelettronica

11 Screw

- Qty. 8
- 1.2 Nm

12 Air guide grille

- Middle air guide grille

13 Bumper strip

- Clipped into cover
- To renew, the bumper cover must be removed

2.3 - Removing and installing bumper cover

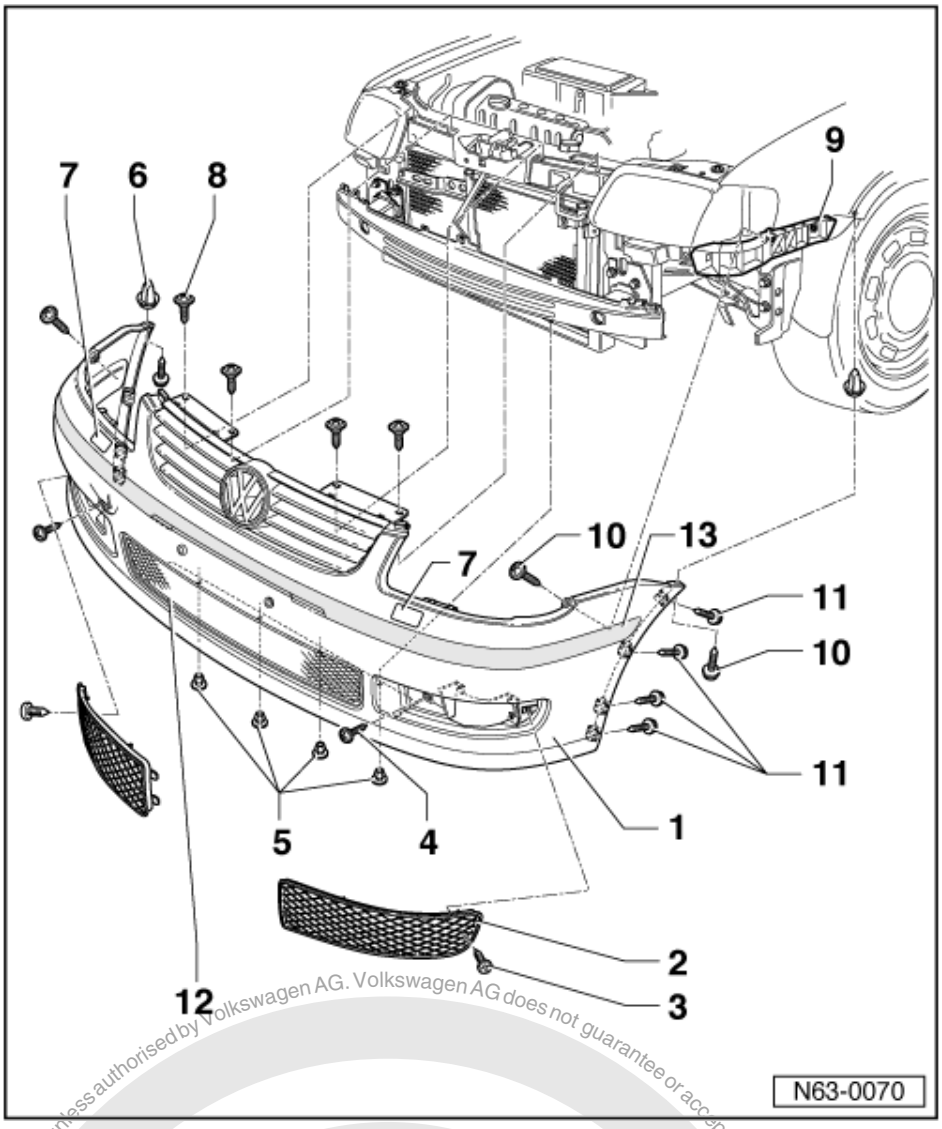

- Remove turn signals

=> Electrical system; Repair group 94; Lights, Lamps, Switches - exterior Lights, Lamps, Switches - exterior

- Pull cover - 7 - for headlight washer system up away from bumper cover and unclip.
- Remove screws - 11 - and - 10 - and release cover - 1 - in area of wheel bearing liner.
- Remove screw - 3 - and pull out exterior air guide grilles - 2 - from cover - 1 -.
- Unclip spreader clips - 5 -.
- Unscrew screws - 4 - and - 8 -. Pull off cover from guide parts - 9 - (left and right).
- Separate connection of temperature sensor.

Protected by copyright. Copying for private or commercial purposes, in part or in whole, is not permitted unless authorised by Volkswagen AG. Volkswagen AG does not guarantee or accept any liability with respect to the correctness of information in this document. Copyright by Volkswagen AG.
satelettronica

2.4 - Bumper carrier - Assembly overview

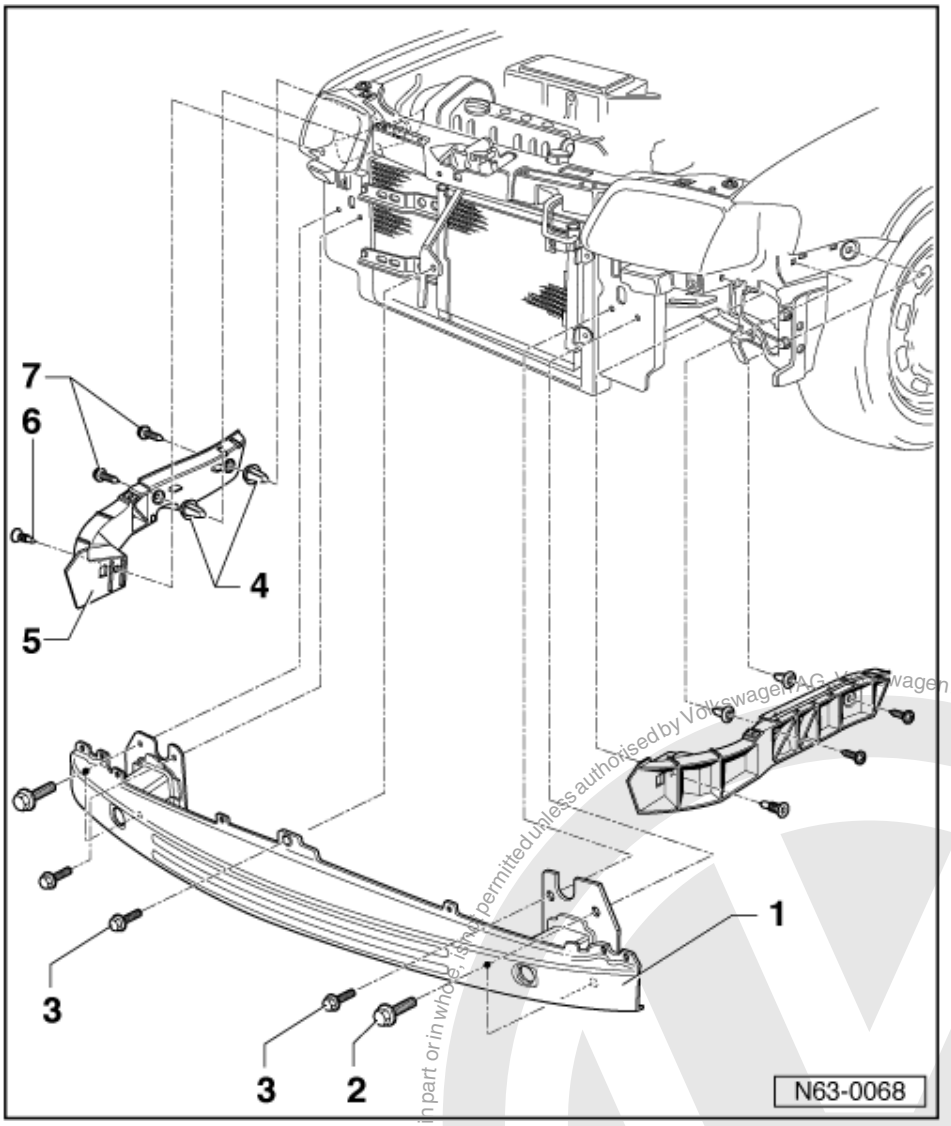

1 Bumper carrier
2 Bolt
- Qty. 4
- 23 Nm

3 Bolt
- Qty. 3
- 14 Nm

4 Spreader nut
- Qty. 4

5 Guide
- To remove/install bumper, pull out or push in parallel to guides at left and right.

6 Bolt
- Qty. 2
- 2 Nm

7 Bolt
- Qty. 4
- 1.5 Nm

Protected by copyright. Copying for private or commercial purposes, in part or in whole, is not permitted unless authorised by Volkswagen AG. Volkswagen AG does not guarantee or accept any liability with respect to the correctness of information in this document. Copyright by Volkswagen AG.
satelettronica

3 - Rear bumper

3.1 - Rear bumper

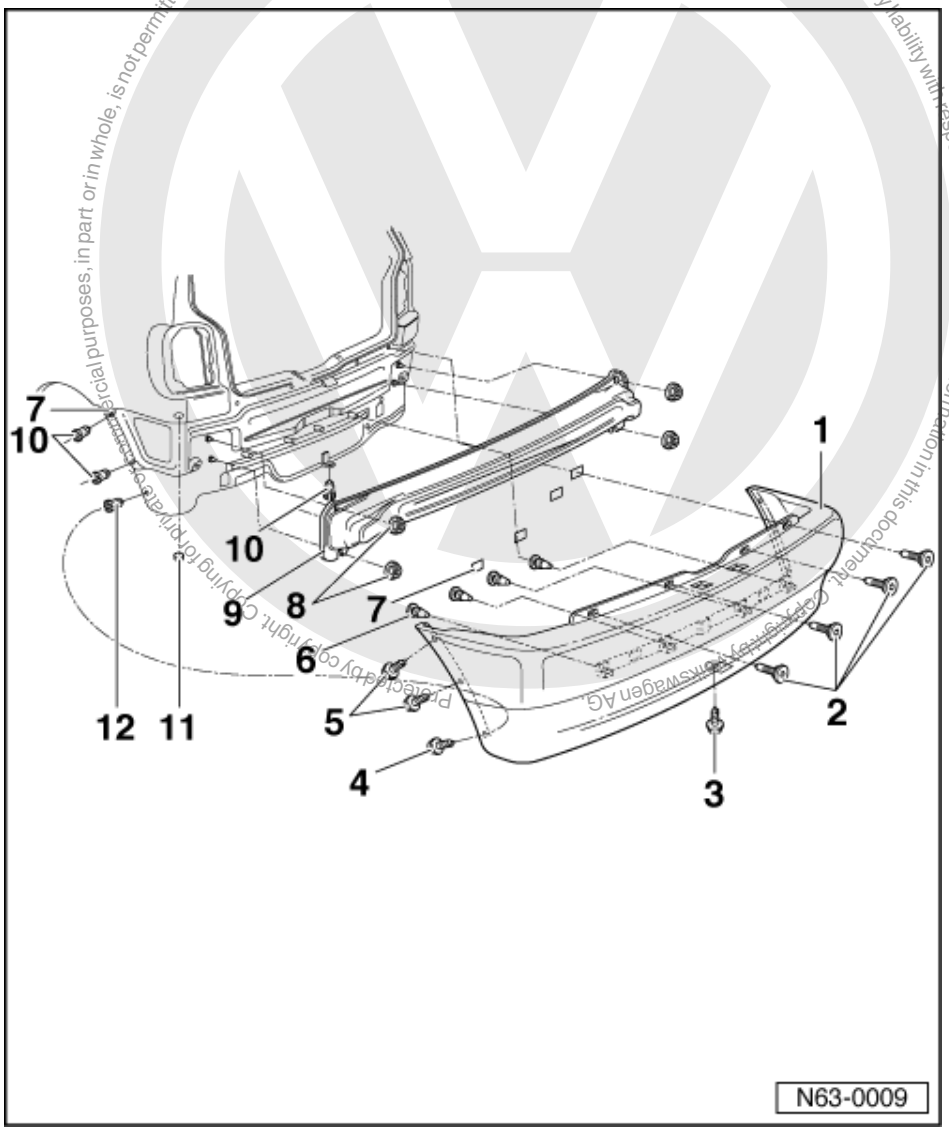

3.2 - Rear bumper > 09.99

3.3 - Assembly overview

1 Bumper
- Cover:
  Material: PP/EPDM
- Removing:
- Open tailgate/boot lid
- Remove Torx screws - 2 -
- Remove screws - 3 - and - 4 - (large bumpers only) and - 5 -. Pull bumper off centring pins - 6 -. Pull connector off number plate light.

2 Torx screw T 30
- 6 Nm (Qty. 4)

satelettronica

3 Screw - only for large bumper
- 1.5 Nm

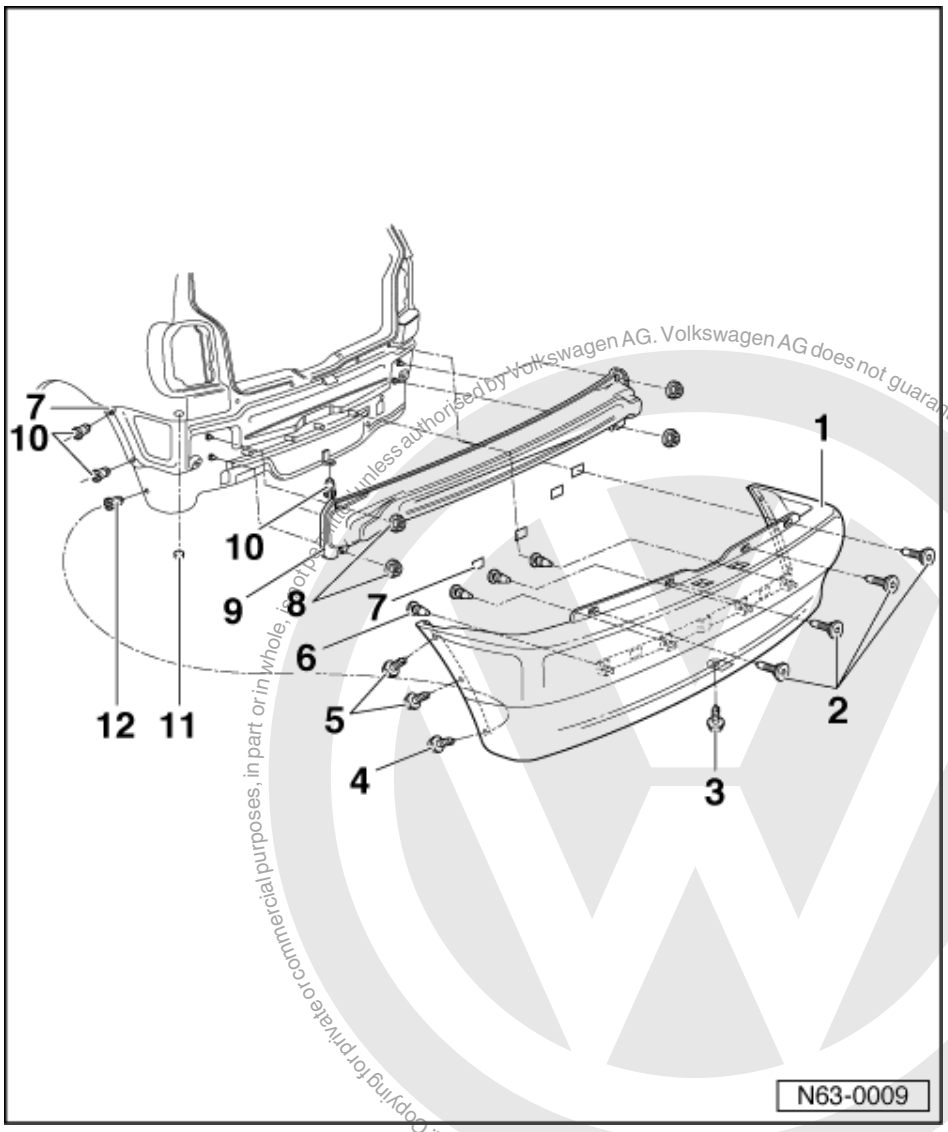

4 Screw - only for large bumper
- 1.5 Nm (Qty. 2)

5 Screw
- 1.5 Nm (Qty. 4)

6 Centring pin
- (Qty. 4)

7 PU foil

8 Hexagon nut
- 15 Nm (Qty. 4)

9 Deformation element

10 Spreader nut

11 Buffer

12 Spreader nut - only for large bumper

Protected by copyright. Copying for private or commercial purposes, in part or in whole, is not permitted unless authorised by Volkswagen AG. Volkswagen AG does not guarantee or accept any liability with respect to the correctness of information in this document. Copyright by Volkswagen AG.
satelettronica

4 - Rear bumper 10.99 >

4.1 - Rear bumper 10.99 >

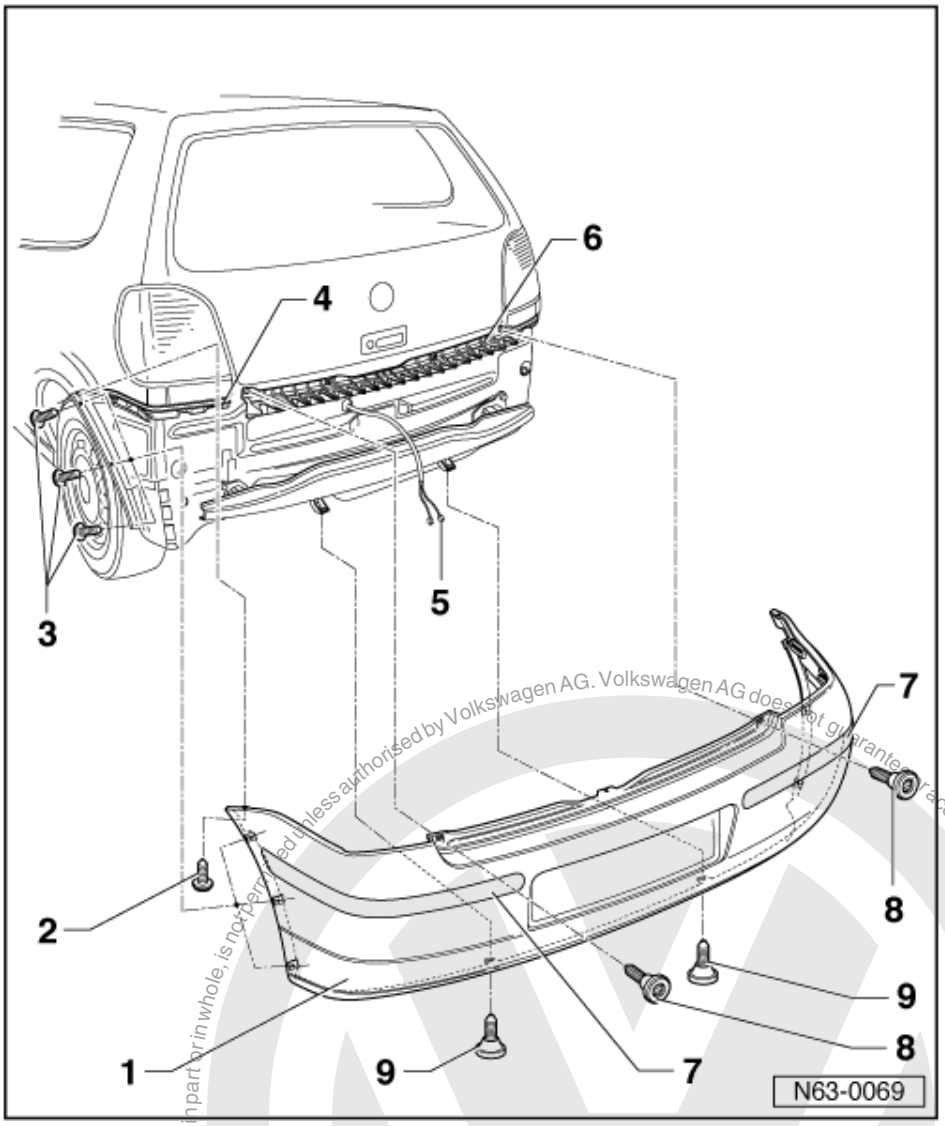

4.2 - Bumper cover - Assembly overview

Note:
- Depending on the model, it is possible that slight changes to the removal and installing procedures may be necessary.

1 Cover
- Material: PP/EPDM
- Removing: => Page 149

2 Screw
- Qty. 2
- 1.2 Nm

3 Screw
- Qty. 6
- 1.2 Nm

Protected by copyright. Copying for private or commercial purposes, in part or in whole, is not permitted unless authorised by Volkswagen AG. Volkswagen AG does not guarantee or accept any liability with respect to the correctness of information in this document. Copyright by Volkswagen AG.
satelettronica

4 Guide
- To remove/install bumper, pull out or push in parallel to guides on left and right.

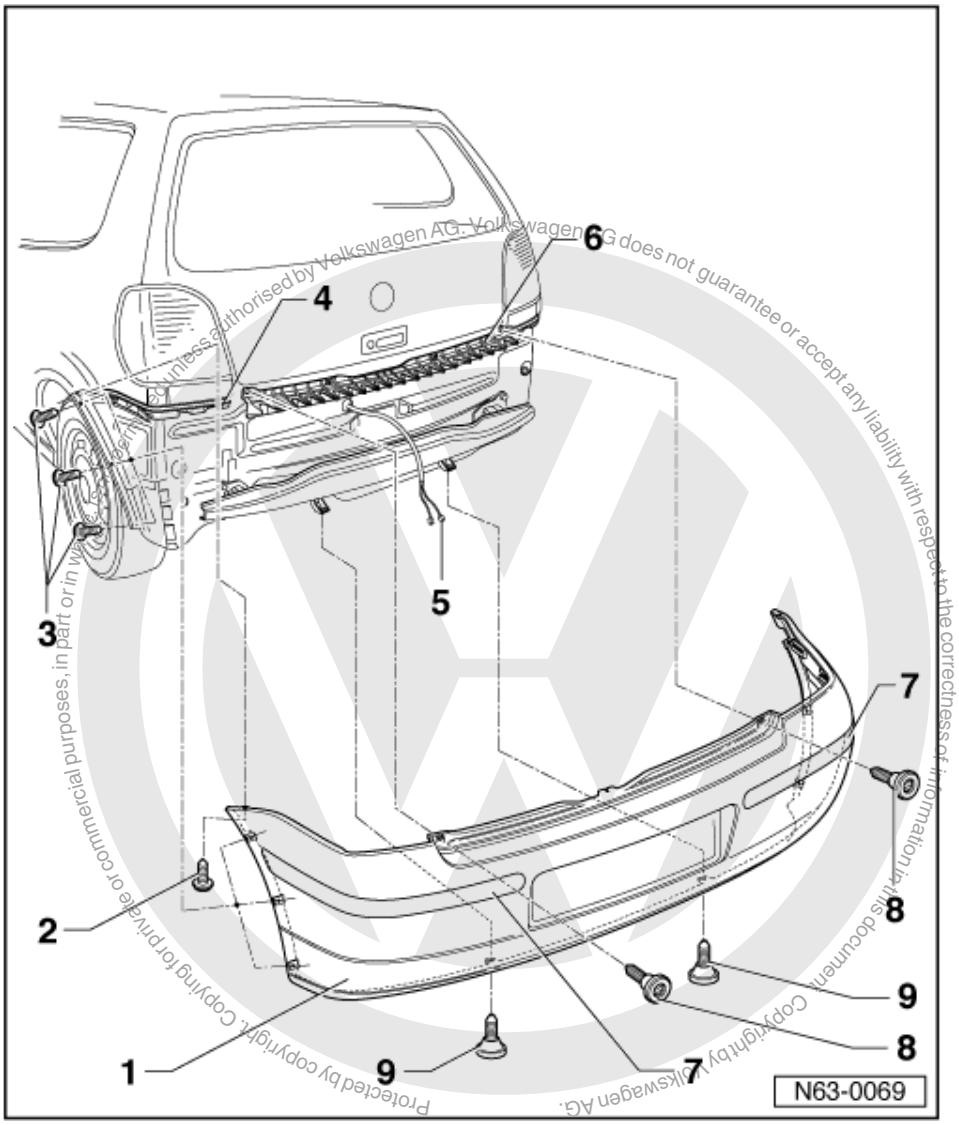

5 Cable with connector for number plate light
6 Securing strip
- Edge of bumper is held by securing strip

7 Bumper strip
- Clipped into cover
- To renew, the bumper cover must be removed

8 Screw
- Qty. 2
- 6.5 Nm

9 Screw
- Qty. 2
- 6.5 Nm

satelettronica

4.3 - Removing and installing bumper cover

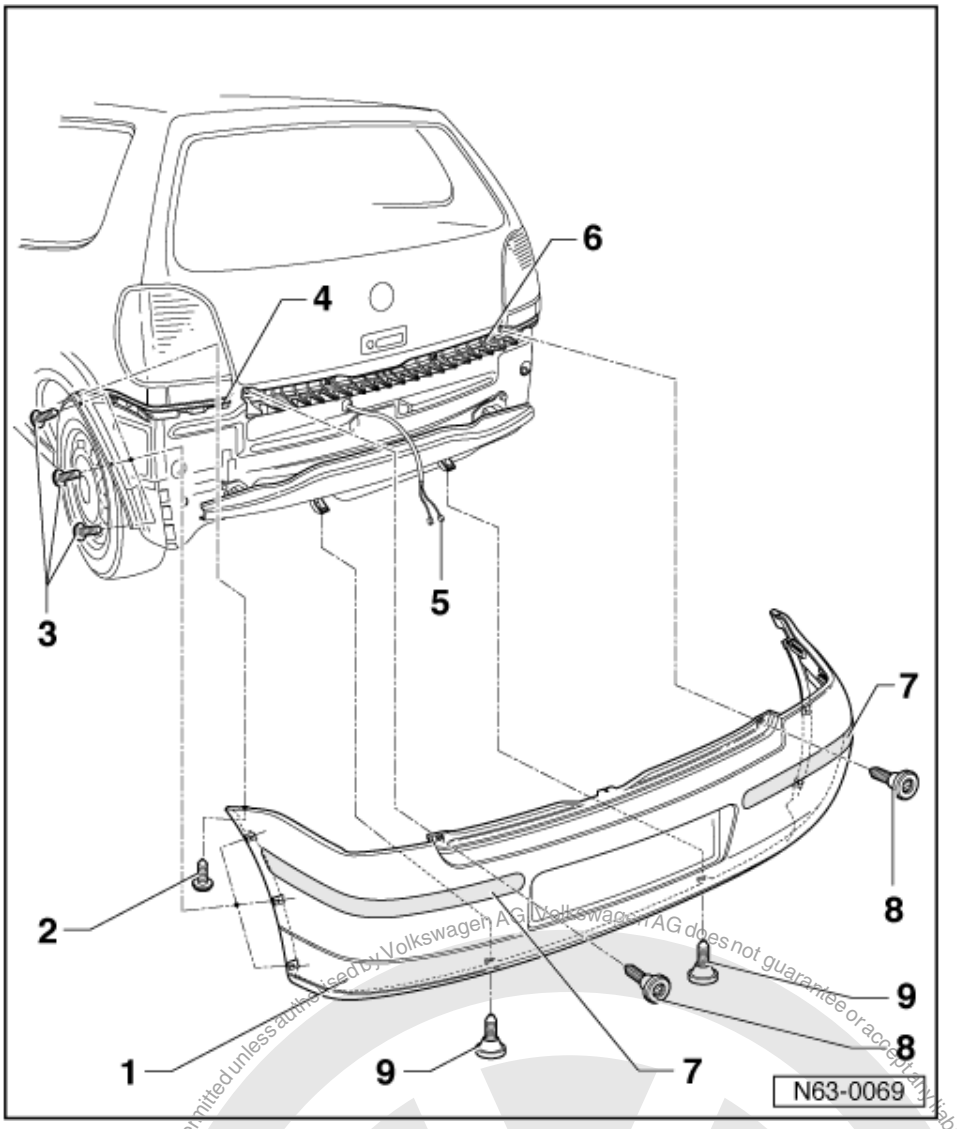

- Remove screws - 2 - and - 3 - and release cover - 1 - in area of wheel housing liner.
- Remove screws - 8 - and - 9 -. Pull off cover from guides - 4 - (left and right-hand side).
- Separate connection - 5 - for number plate light.

satelettronica
Protected by copyright. Copying for private or commercial purposes, in part or in whole, is not permitted unless authorised by Volkswagen AG. Volkswagen AG does not guarantee or accept any liability with respect to the correctness of information in this document. Copyright by Volkswagen AG.

4.4 - Bumper carrier - Assembly overview

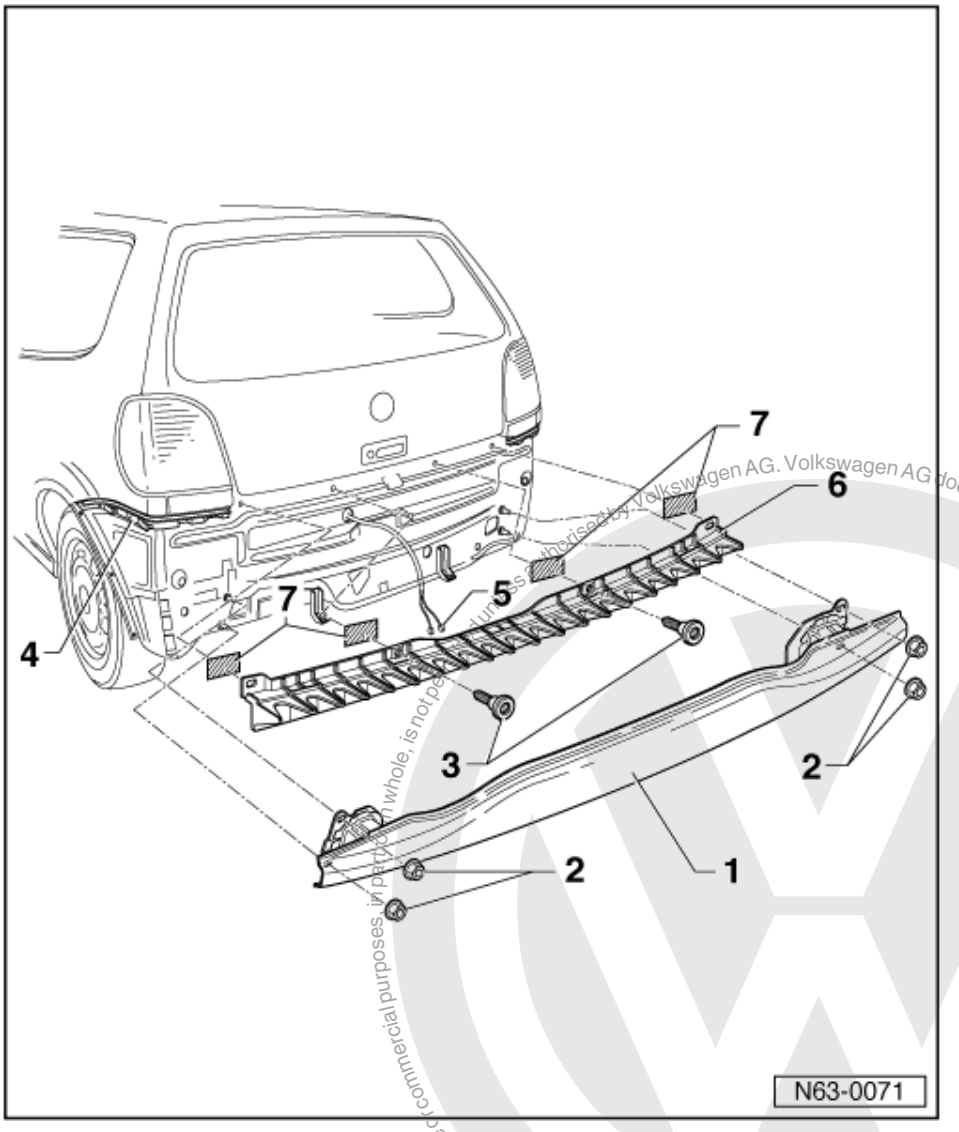

Note:

- Depending on the model, it is possible that slight changes to the removal and installing procedures may be necessary.

1 Bumper carrier
2 Hexagon nut
  - Qty. 4
  - 16 Nm
3 Screw
  - Qty. 2
  - 6.5 Nm

Protected by copyright. Copying for private or commercial purposes, in part or in whole, is not permitted unless authorised by Volkswagen AG. Volkswagen AG does not guarantee or accept any liability with respect to the correctness of information in this document. Copyright by Volkswagen AG.
satelettronica

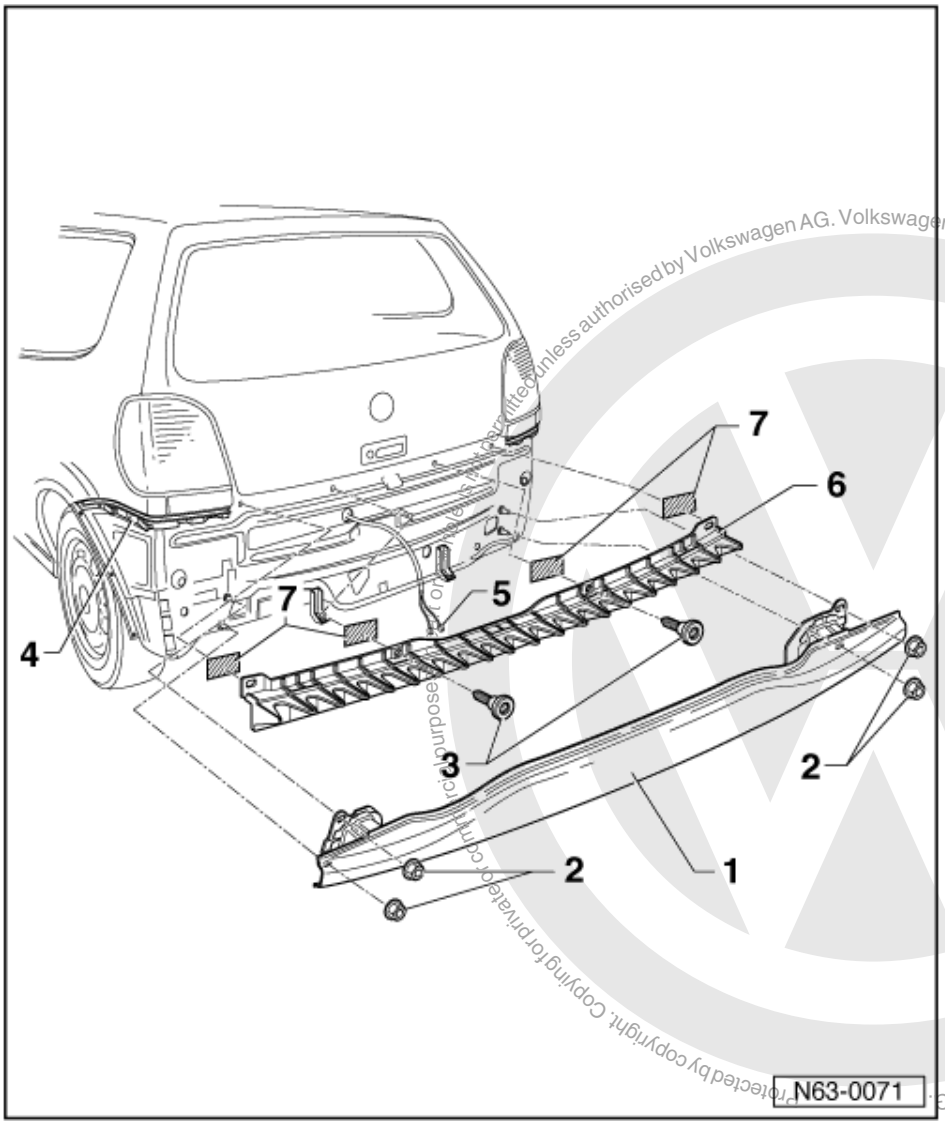

satelettronica
Copyright by Volkswagen AG. Protected by copyright. Copying for private or commercial purposes, in part or in whole, is not permitted unless authorised by Volkswagen AG. Volkswagen AG does not guarantee or accept any liability with respect to the correctness of information in this document.

4 Guide
- To remove/install bumper, pull out or push in parallel to guides on left and right.

5 Cable with connector for number plate light

6 Securing strip
- Edge of bumper is held by securing strip

7 Protective foil
- Self-adhesive

64 - Glazing

1 - Flush bonded windows

1.1 - Flush bonded windows

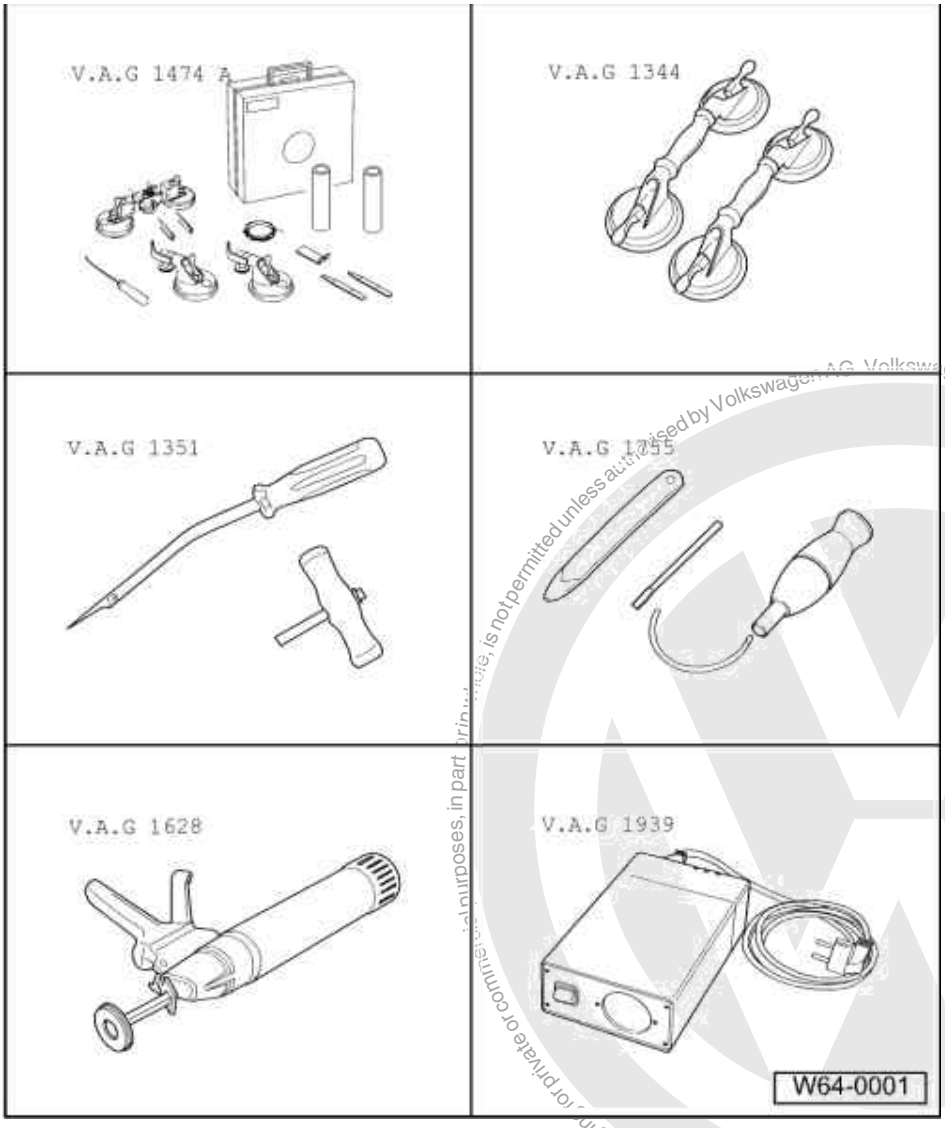

1.2 - Tools

- V.A.G 1474 A Cutting device for flush bonded windows
- V.A.G 1344 Suction lifter
- V.A.G 1351 Cutting tool
- V.A.G 1755 Window removal kit
- V.A.G 1628 Hand cartridge gun
- V.A.G 1939 Cartridge heater

Protected by copyright. Copyright by Volkswagen AG.
Volkswagen AG does not guarantee or accept any liability with respect to the correctness of information in this document.
satelettronica

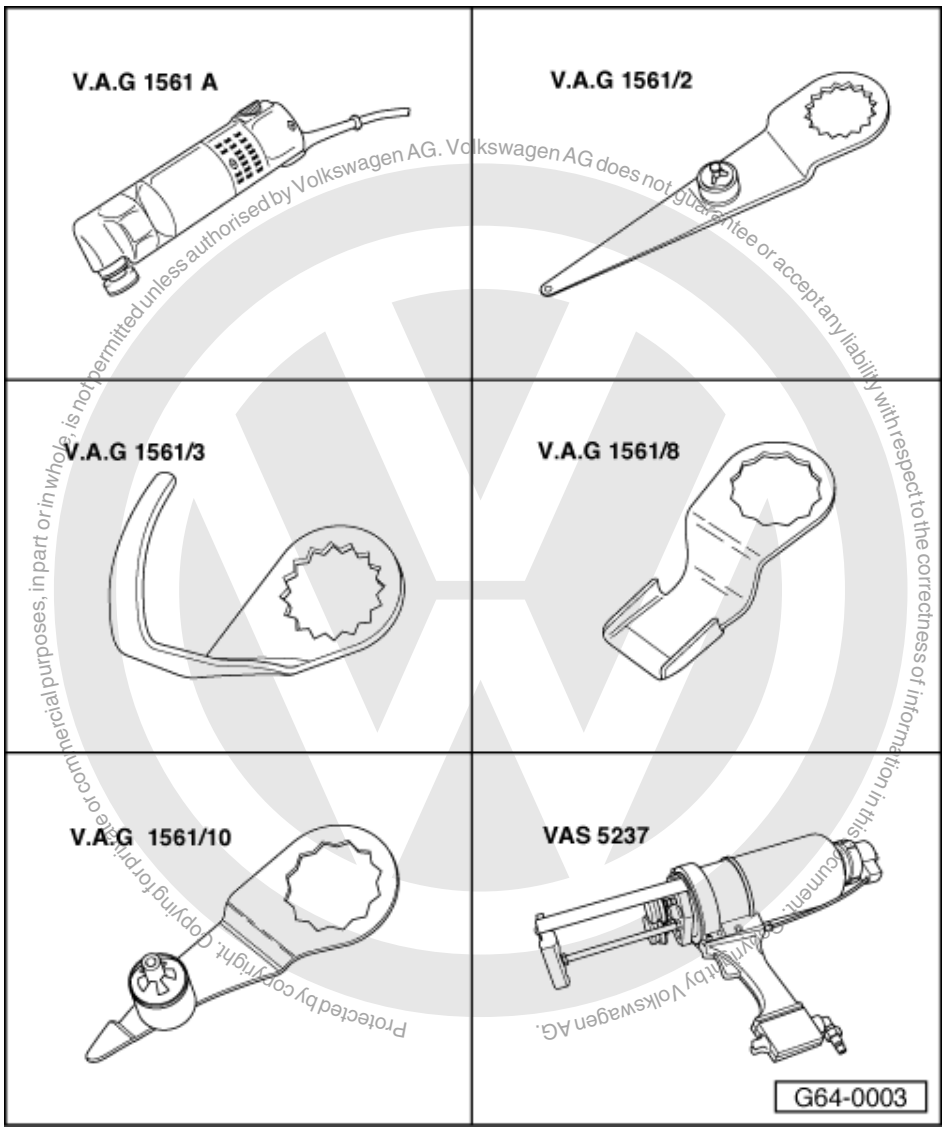

- V.A.G 1561 A Electric cutter
- V.A.G 1561/2 Cutting blade
- V.A.G 1561/3 Cutting blade
- V.A.G 1561/8 Cutting blade
- V.A.G 1561/10 Cutting blade
- VAS 5237 Double cartridge gun

1.3 - Materials

2K window adhesive	DA 004 600 A2 2),3)
- 1K- window adhesive	DH 009 100 03 4), 5)
Activator	D 181 801 A1 1)
Glass primer/paint primer	D 009 200 02 1)
Cleaning solution	D 009 401 04 1)
Primer applicator	D 009 500 25 1)
Adhesive remover	D 002 000 10 1)
- Cutting cord	357 853 999
- Cutting wire	357 845 955

Protected by copyright. Copying for private or commercial purposes, in part or in whole, is not permitted unless authorised by Volkswagen AG. Volkswagen AG does not guarantee or accept any liability with respect to the correctness of information in this document. Copyright by Volkswagen AG.
satelettronica

1) Materials are stored in the box D 004 700.
2) Observe curing time => Page 169 .
3) To apply this material the double cartridge gun VAS 5237 must be used.
4) Heat, as per manufacturers instructions, using cartridge heater V.A.G 1939.
5) Small cartridge 110 ml for sealing and/or when a 400 ml double cartridge is not sufficient.

1.4 - Windscreen - Assembly overview

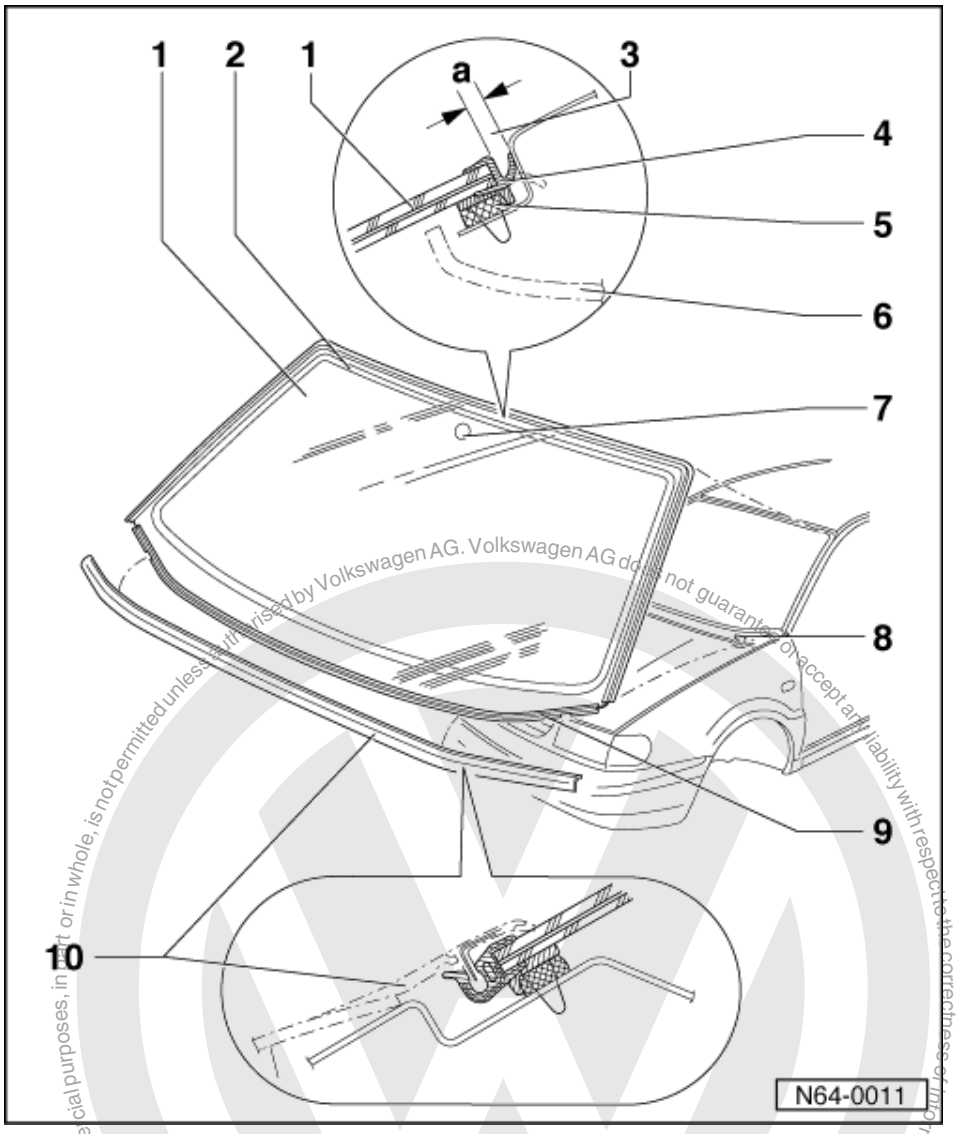

1 Windscreen
- Removing windscreen => Page 158
- Installing windscreen => Page 159

2 Ceramic layer
3 Dimension a = 4 mm
4 Sealing lip (component part of pre-coating)
5 PUR adhesive sealant
- Cross section of bead:
  Width = 7 mm
  Height = 11 mm (including precoating, residual material on window glass and window flange)

satelettronica

- Curing time => Page 169

Protected by copyright. Copying for private or commercial purposes, in part or in whole, is not permitted unless authorised by Volkswagen AG. Volkswagen AG does not guarantee or accept any liability with respect to the correctness of information in this document. Copyright by Volkswagen AG.

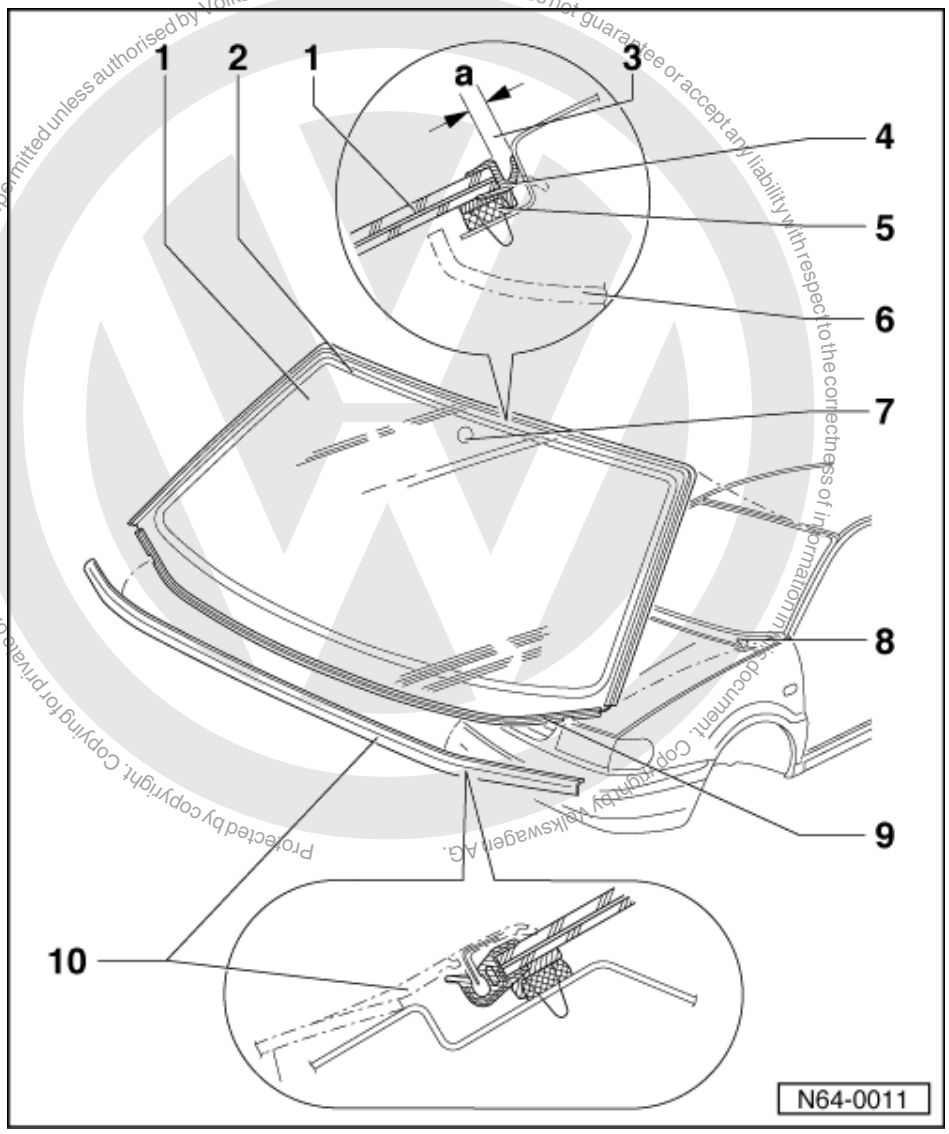

6 Moulded headlining
7 Retaining plate for rear-view mirror
- PUR adhesive

8 Eccentric
- To adjust upper window gap

9 Surround
10 Trim strip for plenum chamber

satelettronica

1.5 - Removing and installing plenum chamber trim

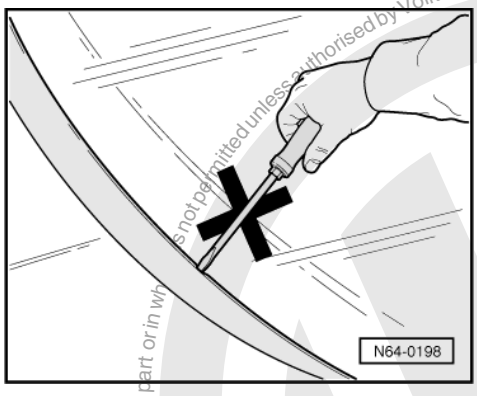

Removing

- Unscrew wiper arms (M8 hexagon nuts = 20 Nm).

-> Note:

The plenum chamber trim must not be levered off with a tool (wedge). Otherwise the windscreen will become damaged and could later crack.

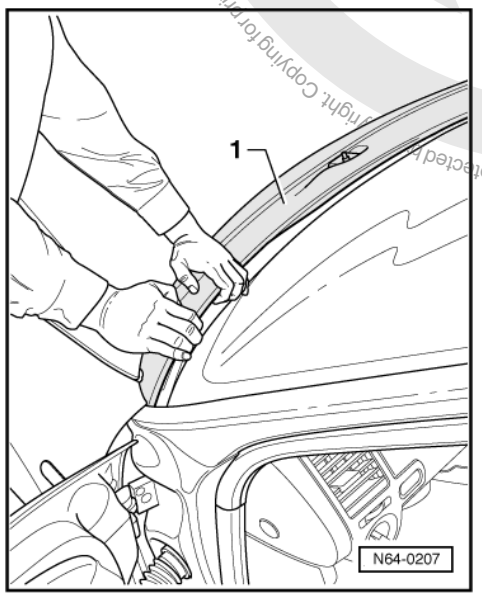

- -> Lift plenum chamber trim -1- on the edge of windscreen.

Volkswagen AG. Volkswagen AG does not guarantee or accept any liability with respect to the correctness of information in this document. Copyright by Volkswagen AG. Protected by copyright. Copying for private or commercial purposes, in part or in whole, is not permitted unless authorised by Volkswagen AG.
satelettronica

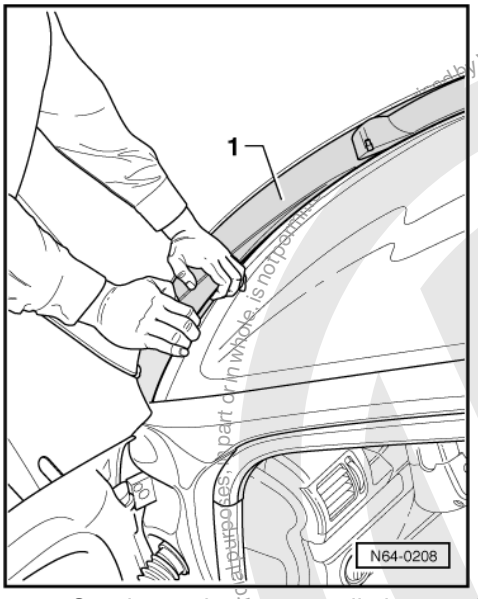

- -> Starting at the corner pull plenum chamber trim -1- out at right angles from the mounting slots in the lower edge of the windscreen.

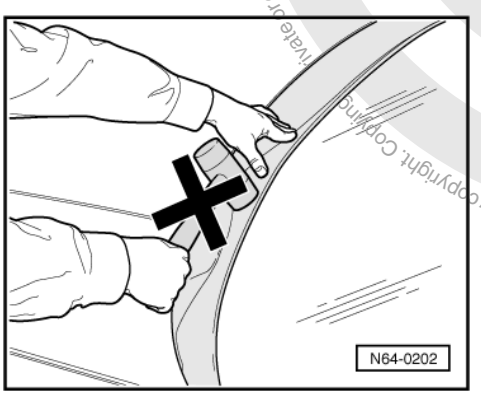

Installing

-> Note:

Striking the plenum chamber trim can cause cracks in the windscreen.

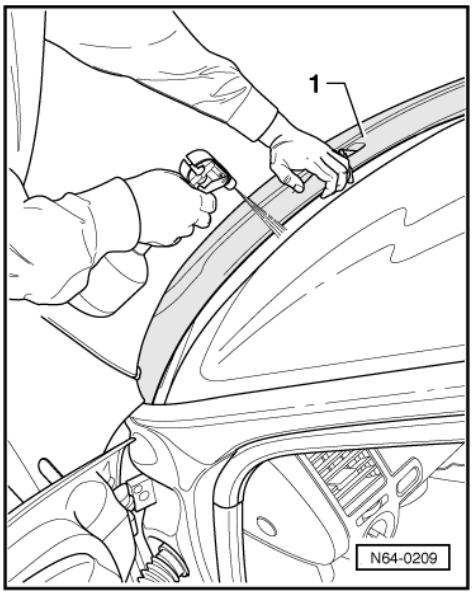

Protected by copyright. Copyright by Volkswagen AG. Volkswagen AG does not guarantee or accept any liability with respect to the correctness of information in this document. Copyright by Volkswagen AG.
satelettronica

- -> To ease the fitting of the plenum chamber trim in the mounting slots -1-, the area should be sprayed with a soapy solution.

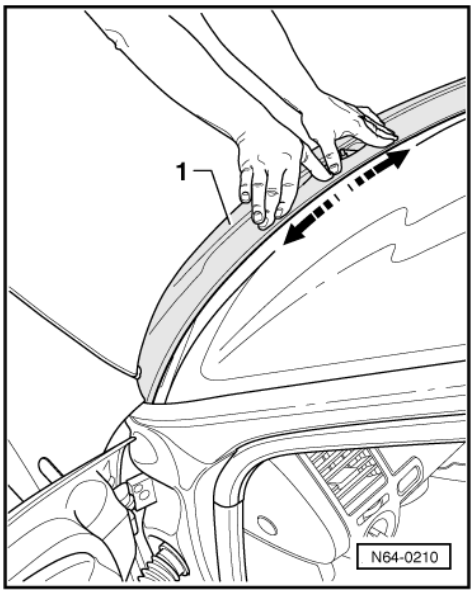

- -> Press plenum chamber trim -1- in mounting slots, starting from centre in direction of arrow.

1.6 - Removing windscreen

- Set back eccentric.

The eccentric has been discontinued gradually.

- Twist inside rear-view mirror off of adhesive plate.
- Remove A-pillar trim.

=> General body repairs, interior; Repair group 70; Trim; Removing and installing A-pillar trim

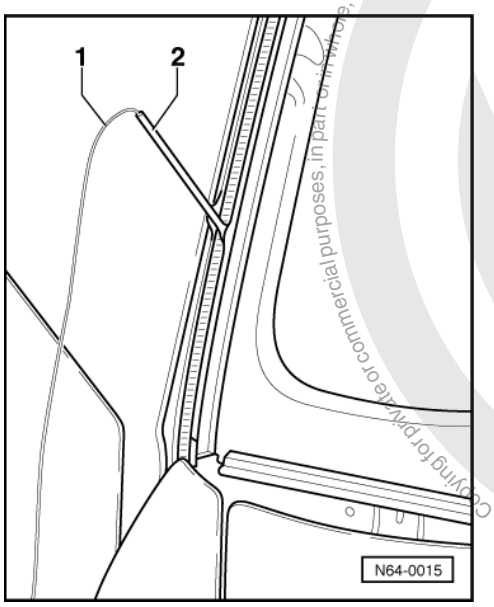

- Loosen sealing lip from window flange with plastic wedge and spray in cleaning solution D 009 401 04 (as substitute for lubricant).

Protected by copyright. Copying for private or commercial purposes, in part or in whole, is not permitted unless authorised by Volkswagen AG. Volkswagen AG does not guarantee or accept any liability with respect to the correctness of information in this document. Copyright by Volkswagen AG.
satelettronica

- -> Place cutting thread -1- under sealing lip with help of tube -2- (cutting wire may also be used).

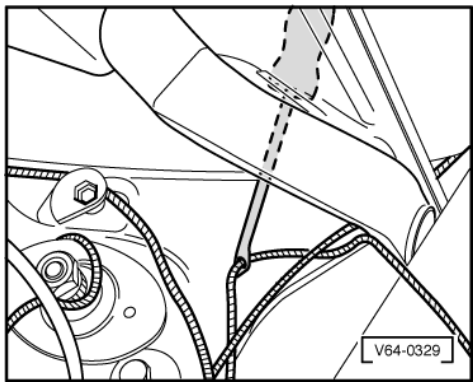

- -> Pull cutting thread through the adhesive sealing material into inside of vehicle with broach (from V.A.G 1474 A). Cutting thread is laid double up to windscreen wiper shaft.

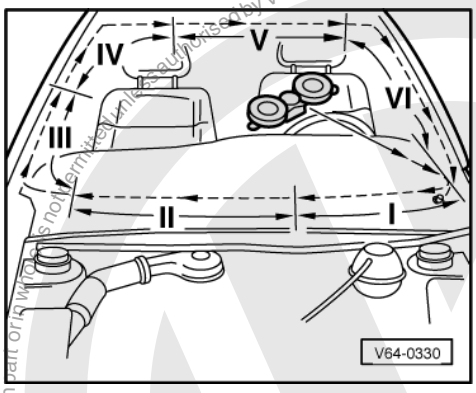

-> Secure outer end of thread to windscreen wiper shaft.
Secure inner end of thread to winding device.
Place winding device V.A.G 1654 in "Position I".
- Move winding device according to position required and cut out windscreen glass.
- Press cutting thread against window glass with plastic wedge during cutting process, in order to have clearance at window flange and dash panel.

1.7 - Installing windscreen

Preparing old undamaged window for glazing => Page 166 .

Preparing new window for glazing => Page 167 .

Preparing body flange for glazing => Page 168 .

Installation instructions => Page 169 .

Curing time => Page 169 .

Protected by copyright. Copying for private or commercial purposes, in part or in whole, is not permitted unless authorised by Volkswagen AG. Volkswagen AG does not guarantee or accept any liability with respect to the correctness of information in this document. Copyright by Volkswagen AG.
satelettronica

1.8 - Side window - Assembly overview

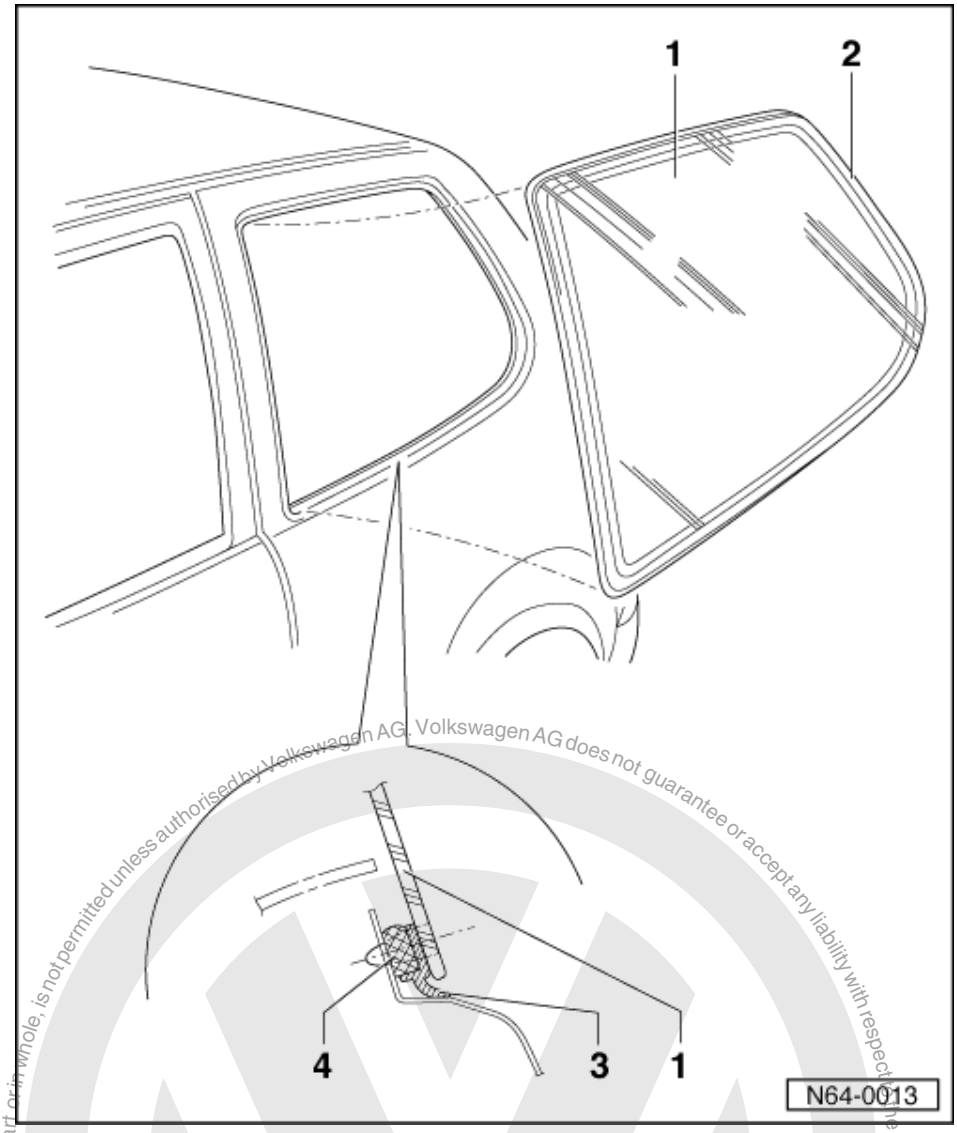

1 Side window
- Removing side window => Page 160
- Installing side window => Page 162

2 Ceramic layer

3 Sealing lip (component part of pre-coating)

4 PUR adhesive sealant
- Cross section of bead:
  Width = 7 mm
  Height = 11 mm (including precoating, residual material on window glass and window flange)
- Curing time => Page 169

1.9 - Removing undamaged side window

- Remove side trim and B-pillar trim.

=> General body repairs, interior; Repair group 70; Trims; Removing and installing B-pillar trim

=> General body repairs, interior; Repair group 70; Trims; Removing and installing side trim (two-door Polo)

Protected by copyright. Copyright by Volkswagen AG. Volkswagen AG does not guarantee or accept any liability with respect to the correctness of information in this document. Copying for private or commercial purposes, in part or in whole, is not permitted unless authorised by Volkswagen AG.
satelettronica

- Remove luggage compartment cover mounting and loosen upper C-pillar trim.

=> General body repairs, interior; Repair group 70; Trims; Removing and installing luggage compartment cover mounting

=> General body repairs, interior; Repair group 70; Trims; Removing and installing upper C-pillar trim

- Insert plastic wedge between sealing lip and window flange.

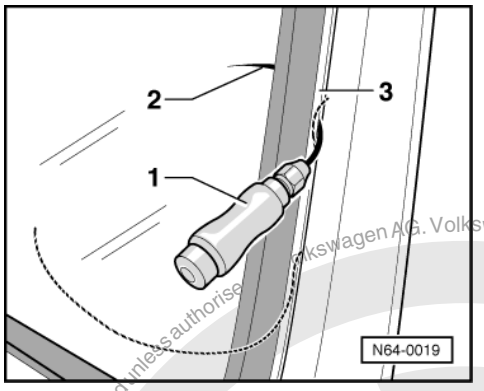

- Loosen sealing lip from window flange all round and spray in cleaning solution D 009 401 04 (as substitute for lubricant).
- -> With help of handle -1- guide trimming needle -2- under sealing lip -3- and puncture through adhesive bead (use a side area).

The trimming needle must be guided as close as possible to the window.

- Unscrew handle and pass cutting thread through eye of needle.
- Pull cutting thread towards inside (use pliers and gloves).

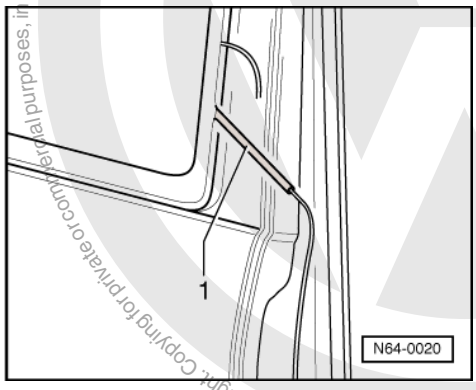

- -> Guide in cutting thread between lip and window flange with help of tube -1- (If the cutting thread should break, then cutting wire can also be used).
- If the gap is too small guide cutting thread on outside and press under the lip with a plastic wedge.
- Place cutting thread around the side window.

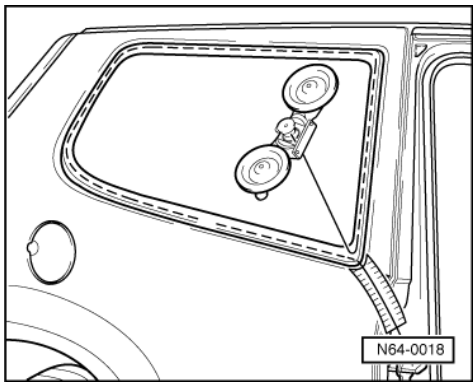

Copyright by Volkswagen AG. Volkswagen AG does not guarantee or accept any liability with respect to the correctness of information in this document. Copying for private or commercial purposes, in part or in whole, is not permitted unless authorised by Volkswagen AG.
satelettronica

- -> Secure outer end of thread on striker pin (apply strip of textile reinforced adhesive tape along route of thread).
- Secure inner end of thread on winding device V.A.G 1654 and cut out window by moving the winding device as necessary.
- Press cutting thread against window glass with plastic wedge during cutting process, in order to have clearance at window flange.

1.10 - Removing broken side window

Removing broken side window => Removing broken rear window Page 165 .

1.11 - Installing side window

Preparing old undamaged window for glazing => Page 166 .

Preparing new window for glazing => Page 167 .

Preparing body flange for glazing => Page 168 .

Installation instructions => Page 169 .

Curing time => Page 169 .

Protected by copyright. Copying for private or commercial purposes, in part or in whole, is not permitted unless authorised by Volkswagen AG. Volkswagen AG does not guarantee or accept any liability with respect to the correctness of information in this document. Copyright by Volkswagen AG.
satelettronica

1.12 - Rear window - Assembly overview

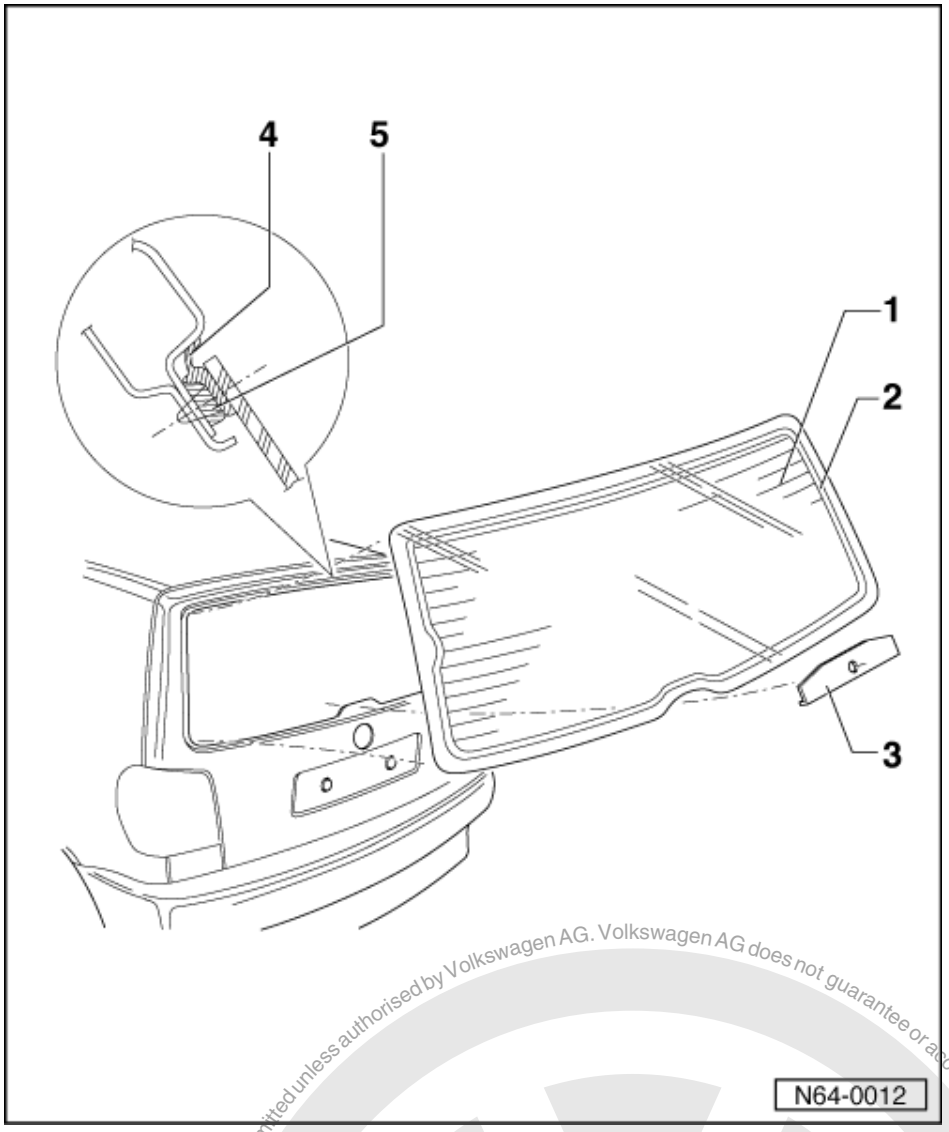

1 Rear window
- Removing rear window => Page 163
- Installing rear window => Page 165

2 Ceramic layer

3 Cover

4 Sealing lip (component part of precoating)

5 PUR adhesive sealant
- Cross section of bead:
  Width = 7 mm
  Height = 11 mm (including precoating, residual material on window glass and window flange)
- Curing time => Page 169

1.13 - Removing undamaged rear window

- Removing rear lid trim

=> General body repairs, interior; Repair group 70; Trim, removing and installing rear lid trim Trim, removing and installing rear lid trim

Protected by copyright. Copying for private or commercial purposes, in part or in whole, is not permitted unless authorised by Volkswagen AG. Volkswagen AG does not guarantee or accept any liability with respect to the correctness of information in this document. Copyright by Volkswagen AG.
satelettronica

- Removing additional brake light

=> Electrical system; Repair group 94, additional brake light, removing and installing additional brake light

Note:

On vehicles fitted with a spoiler, the spoiler must be removed.

- Pull off connections for heated rear window and press connecting tabs onto window.

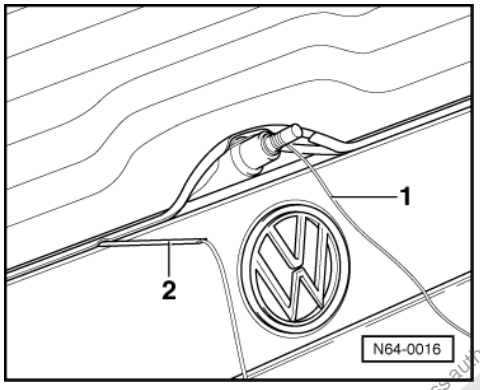

- Remove rear wiper arm (M8 hexagon nut = 15 Nm).
- Loosen sealing lip from window flange all round with plastic wedge and spray in cleaning solution D 009 401 04 (as substitute for lubricant).
- -> Guide in cutting thread -1- between sealing lip and window flange with help of tube -2- (if the cutting thread should break, then cutting wire can also be used).

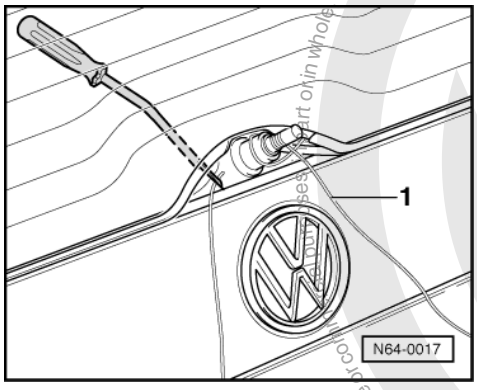

- If the gap is too small guide cutting thread on outside and push under the lip with a plastic wedge.
- -> Pull cutting thread through the adhesive sealing material into inside of vehicle with broach (from V.A.G 1474 A). Cutting thread is laid double up to windscreen wiper shaft.

Note:

Press in cutting thread deep enough in order to avoid damaging the sealing lip and/or spacing lip.

- Secure outer end of thread to window wiper shaft, or pull in end of thread towards inside and counter hold with pulling handle V.A.G 1351/1.

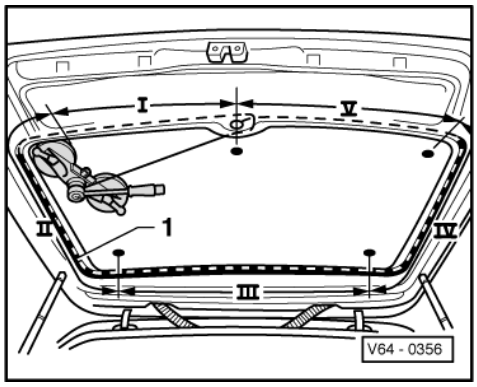

Protected by copyright. Copying for private or commercial purposes, in part or in whole is not permitted unless authorised by Volkswagen AG. Volkswagen AG does not guarantee or accept any liability with respect to the correctness of information in this document. Copyright by Volkswagen AG.
satelettronica

- Pull off connections for heated rear window and press connecting tabs onto window.
- -> Cover inside of window flange -1- with textile reinforced adhesive tape (only when using cutting wire).
- Secure inner end of thread on winding device.
- Place winding device V.A.G 1654 in Position I.
- Move winding device according to position required and cut out window glass.
- Press cutting thread against window glass with plastic wedge during cutting process, in order to have clearance at window flange.

1.14 - Removing broken rear window

- Protect body and interior against damage from glass splinters.
- Remove pieces of glass up to adhesive sealing material.

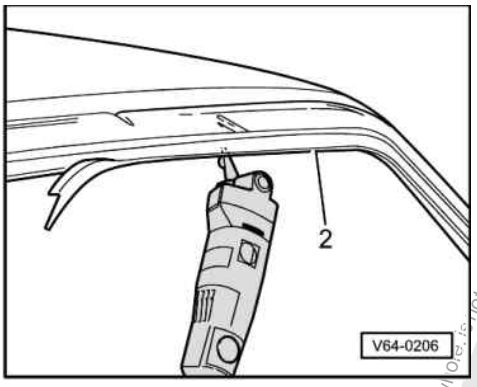

- Pull off connectors for heated rear window and aerial.
- -> Cover flange -2- all round with textile reinforced adhesive tape.
- Cut through adhesive sealing material (with remainders of glass) in window opening with electric cutter and blade V.A.G 1561/10 (with stop roller).

Warning! Always wear protective goggles and leather gloves.

1.15 - Installing rear window

Preparing old undamaged window for glazing => Page 166 .

Preparing new window for glazing => Page 167 .

Preparing body flange for glazing => Page 168 .

Installation instructions => Page 169 .

Curing time => Page 169 .

Protected by copyright. Copying for private or commercial purposes, in part or in whole, is not permitted unless authorised by Volkswagen AG. Volkswagen AG does not guarantee or accept any liability with respect to the correctness of information in this document. Copyright by Volkswagen AG.
satelettronica

1.16 - Preparing old undamaged window for glazing

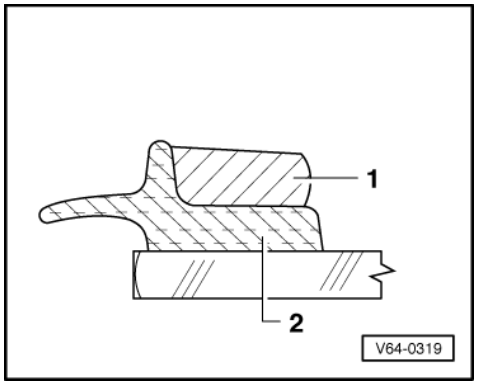

-> Note:

When reusing an undamaged window, cut back remaining adhesive sealing material -1- to thickness of 1 to 2 mm using an electric cutter and blade V.A.G 1561/10 with stop roller. Do not damage the pre-coating or sealing lip with spacing lip -2-.

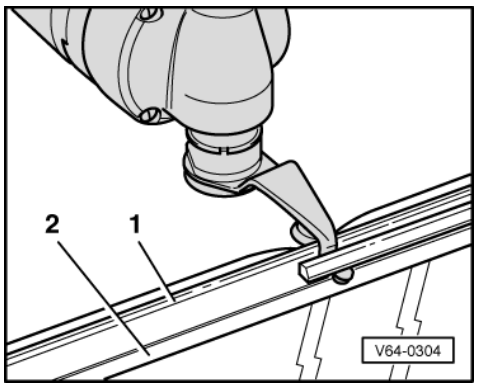

- -> Do not damage spacing lip -1- and ceramic layer -2-.

Warning!
Do not prime, activate or use cleaning agent on adhesive surface.
Keep adhesive surface clean and grease-free.

Exception: If bonding is not performed immediately after cutting back, the remaining residual material must be activated with activator D 181 801 A1.

satelettronica
Protected by copyright. Copying for private or commercial purposes, in part or in whole, is not permitted unless authorised by Volkswagen AG. Volkswagen AG does not guarantee or accept any liability with respect to the correctness of information in this document. Copyright by Volkswagen AG.

1.17 - Preparing new window for glazing

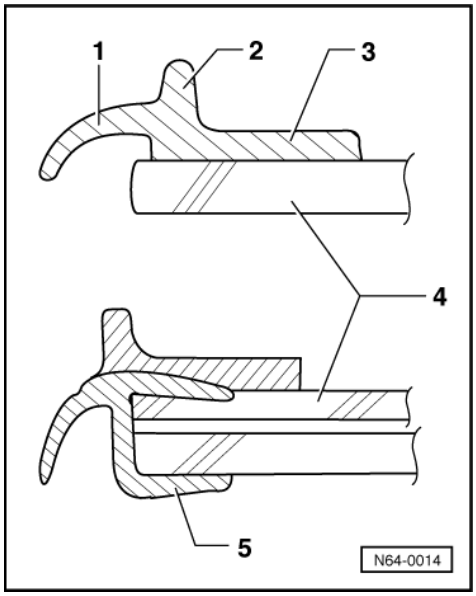

-> New windows are supplied pre-coated with PUR. The pre-coating consists of items 1, 2 and 3.

1 - Sealing lip
2 - Spacing lip
3 - Area for application of adhesive bead
4 - Window glass
5 - Surround (only windscreen)

- Rub down pre-coating with a dry, lint-free cloth.

Warning!
Do not prime precoating and do not treat with cleaning agent.

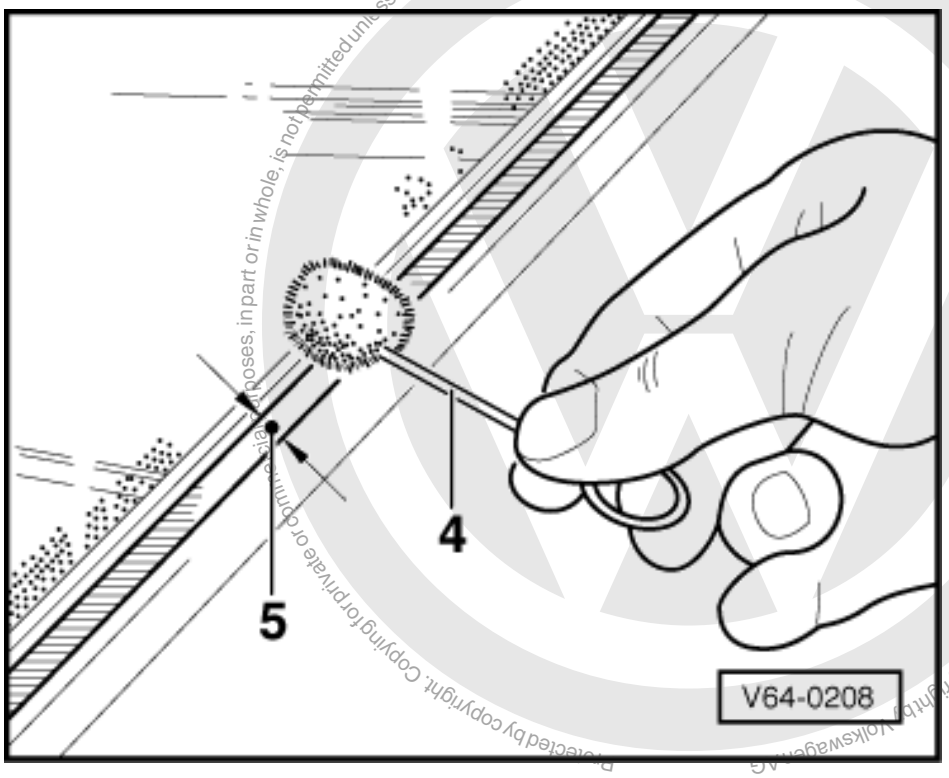

satelettronica
Protected by copyright. Copying for private or commercial purposes, in part or in whole, is not permitted unless authorised by Volkswagen AG. Volkswagen AG does not guarantee or accept any liability with respect to the correctness of information in this document. Copyright by Volkswagen AG

- -> Apply a thin coat of activator D 181 801 A1 only on pre-coating -2- of the window using applicator -1- D 009 500 25 (felt ball with wire).
- Allow activator to air dry for at least 10 minutes.

Note:

Activator must not have contact with paint, otherwise the paint finish will be damaged.

1.18 - Preparing body flange for glazing

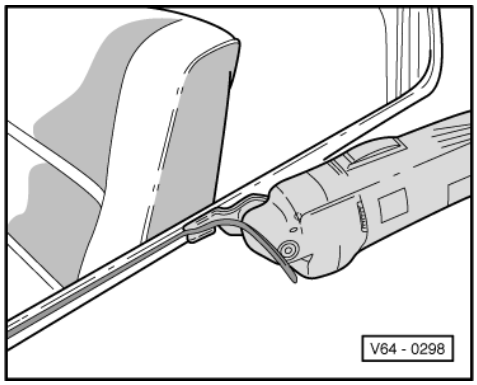

- -> Cut back remaining material on window flange with scraping blade V.A.G 1561/8, but do not remove completely.

Notes:

- Remaining material is required as a base for better adhesion of the new coat of adhesive sealing material to be applied. Keep dirt and grease off of adhesive surfaces.

Warning! Activator must not have contact with paint, otherwise the paint finish will be damaged.

Exception: If bonding is not performed immediately after cutting back, the remaining residual material must be activated with activator D 181 801 A1.

- If the window flange has been repaired or partially renewed, after painting, the area concerned must be cleaned and primed again.

Protected by copyright. Copying for private or commercial purposes, in part or in whole, is not permitted unless authorised by Volkswagen AG. Volkswagen AG does not guarantee or accept any liability with respect to the correctness of information in this document. Copyright by Volkswagen AG.

satelettronica

1.19 - Installation instructions

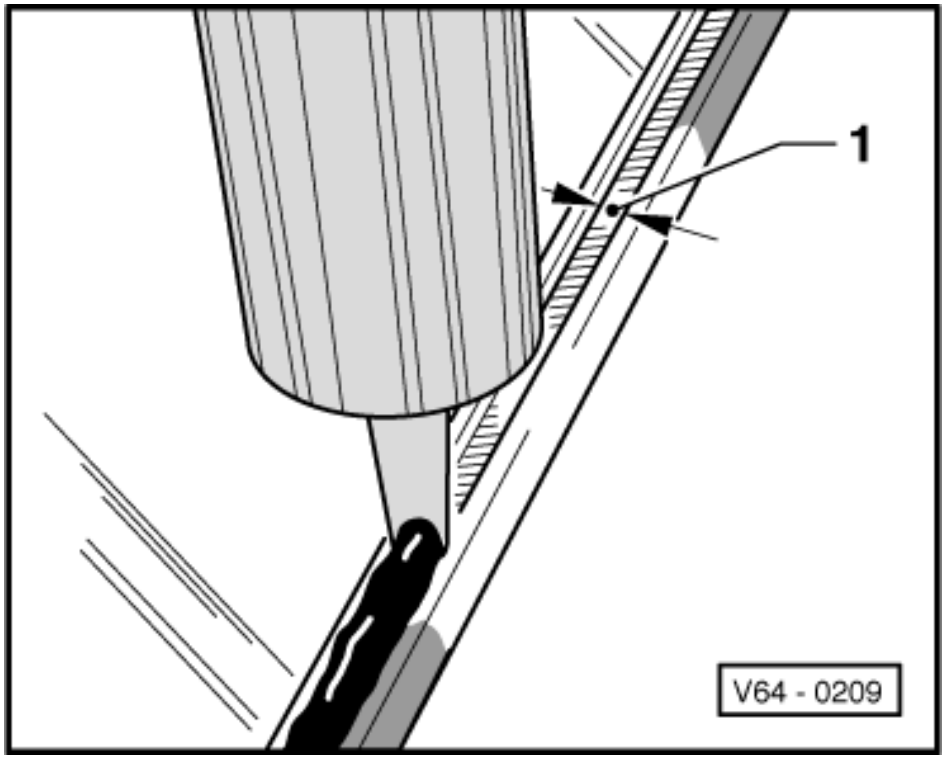

- -> Apply adhesive material (continuous bead) to pre-coating -1-, applicator at right angle to window.

> Warning!
> Window must be installed within 10 minutes, otherwise adhesive properties of adhesive sealant will be impaired.

- With help of two double suction cups (V.A.G 1344) install glass pane in window opening, centre and press in onto the spacing lip.
- Secure window glass in position with adhesive tape during the curing process.
- If the adhesive bead has been applied too thick and the adhesive expands onto the area of the window heating, then the excess adhesive must be removed.
- It is absolutely necessary to install plenum chamber trim as described on page 156 .

1.20 - Curing time

> Warning!
> The special standards must be adhered to when replacing bonded windows. One of these standards for example is, that a freshly bonded windscreen must comply with the safety elements, even in an accident, once the adhesive has exceeded the prescribed curing time.

With the new 2K adhesive DA 004 600 A2 a shorter curing time, as shown in the table, has been attained.

Type of window	Vehicle	Window adhesive	Curing time
Windscreen	With and without Airbag	DA 004 600 A2	3 hours

Protected by copyright. Copying for private or commercial purposes, in part or in whole, is not permitted unless authorised by Volkswagen AG. Volkswagen AG does not guarantee or accept any liability with respect to the correctness of information in this document. Copyright by Volkswagen AG.
satelettronica

Type of window	Vehicle	Window adhesive	Curing time
Side windows and Rear windows			

Curing time means: from bonding window into taking vehicle into use. During the curing time the vehicle must stand on a level surface at room temperature (at least15°C).

Warning!
Vehicle is only safe to use after curing time is completed.

1.21 - Touching up paint damage

Paint composition is to be restored according to specifications in Workshop Manual "Vehicle Painting".

The following repair method is suitable for damaged paint finish in an area which is not visible:

- Painting over twice (wet-on-wet) with glass/paint primer D 009 200 02 - flash-off time = approx. 10 minutes.

1.22 - Cleaning off surplus adhesive sealing material

- It is recommended to use adhesive remover D 002 000. 10 as a cleaning solution. Application of this product requires conformance with safety precautions.

Warning!
Glass which has just been installed should not be pressed outwards whilst cleaning from inside of vehicle.

- First clean painted surface roughly with a dry cloth. Remove remaining adhesive with adhesive remover D 002 000. 10.
- Cleaning plastic trim:
  Allow adhesive sealing material to cure (approx. one hour) and then peel off.

Protected by copyright. Copyright by Volkswagen AG. Volkswagen AG does not guarantee or accept any liability with respect to the correctness of information in this document. Copyright by Volkswagen AG.
satelettronica

2 - Door windows

2.1 - Door windows

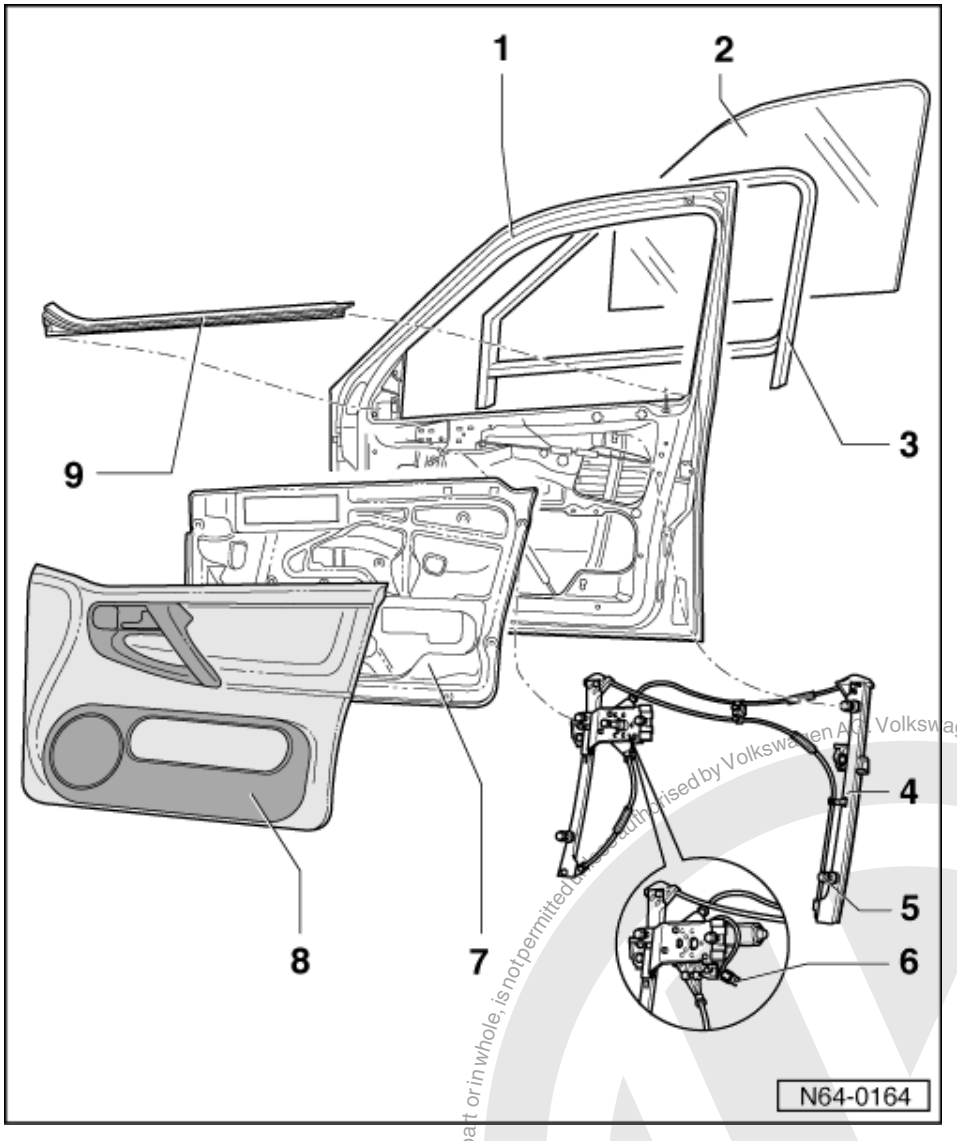

2.2 - Front door window - Assembly overview

1 Door
2 Door window
- Removing =>Page 173
- Adjusting =>Page 174

3 Window channel
- Buttoned into window frame

4 Window lifter
- Removing and installing => Page 174

5 Hexagon head bolt
- Only loosened for removal of window lifter
- 10 Nm

6 Electrical window lifter motor connector

satelettronica
Protected by copyright. Copying for private or commercial purposes, in part or in whole, is not permitted unless authorised by Volkswagen AG. Volkswagen AG does not guarantee or accept any liability with respect to the correctness of information in this document. Copyright by Volkswagen AG.

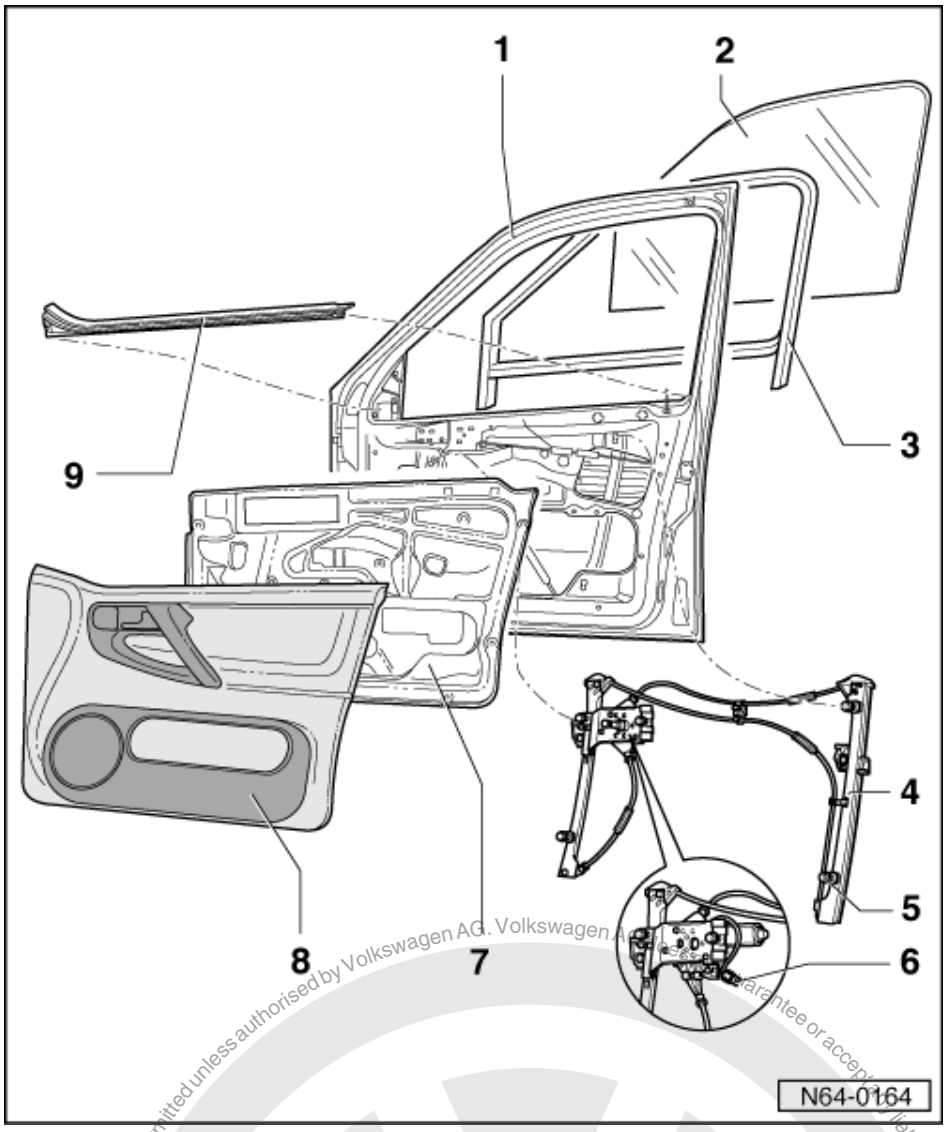

7 Insulation sheeting
8 Trim
9 Window slot inner seal
- Pushed onto flange
- Material: PVC/ABS/EPDM
- Removing and installing => Page 172

2.3 - Removing and installing window slot seal

Removing

- Pull cover off for exterior mirror.

satelettronica
Protected by copyright. Copying for private or commercial purposes, in part or in whole, is not permitted unless authorised by Volkswagen AG. Volkswagen AG does not guarantee or accept any liability with respect to the correctness of information in this document. Copyright by Volkswagen AG.

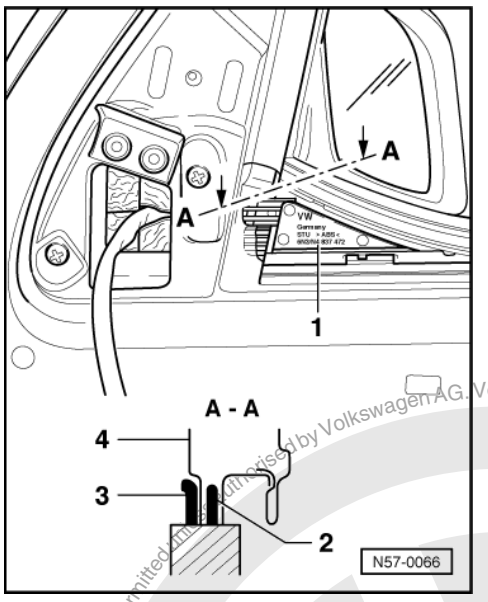

- Remove door trim.

=> General body repairs, interior; Repair group 70; Door trim; Removing and installing front door trim Door trim Removing and installing front door trim

- Pull window slot seal -1- off beginning at rear of window flange.

Installing

- -> Place window slot seal -1- on from forward end of window flange.
- Guides -2 and 3- grip onto door inner panel -4-.
- Finally push window slot seal completely on.

2.4 - Removing door window

- Remove door trim and door insulation sheeting.

=> General body repairs, interior; Repair group 70; Door trim; Removing and installing front door trim Door trim Removing and installing front door trim

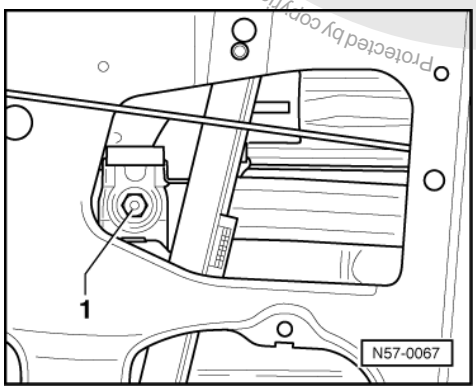

- Remove window slot seal and lower door window
- -> Loosen hexagon nuts -1- and press clamping jaws apart.
- Pull door window upwards, tilt towards front and lift out of window slot.

Copyright by Volkswagen AG. Volkswagen AG does not guarantee or accept any liability with respect to the correctness of information in this document. Copyright by Volkswagen AG. Protected by copyright. Copying for private or commercial purposes, in part or in whole, is not permitted unless authorised by Volkswagen AG.
satelettronica

2.5 - Adjusting door window

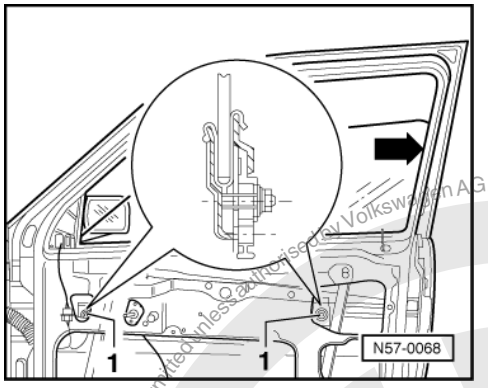

Door window screwed lightly to window lifter.

- -> Crank door window upwards or downwards until clamping jaws are located in the installation openings.
- Loosen clamping jaws, push door window into window channel -arrow- and with hexagon nuts -1- (10 Nm) tighten clamping jaws .

2.6 - Removing and installing window lifter

Removing

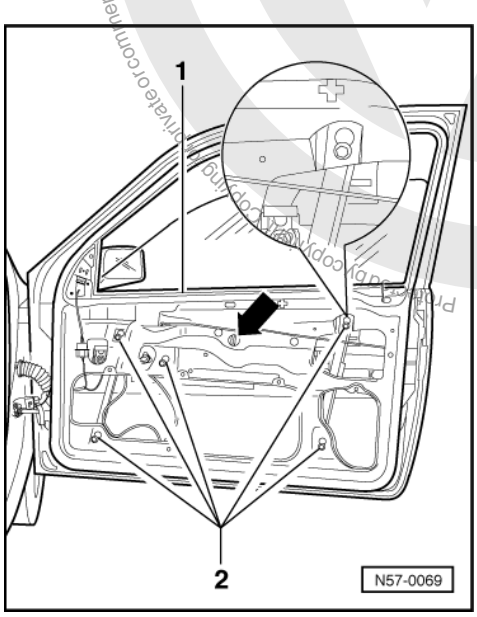

- Remove door trim and door insulation sheeting.

=> General body repairs, interior; Repair group 70; Door trim; Removing and installing front door trim Door trim Removing and installing front door trim

- -> Pull inner window slot seal off -1- flange.
- Crank door window down and unscrew door window.

- Tilt door window towards front and lift out of window slot.

Protected by copyright. Copying for private or commercial purposes, in part or in whole, is not permitted unless authorised by Volkswagen AG. Volkswagen AG does not guarantee or accept any liability with respect to the correctness of information in this document. Copyright by Volkswagen AG.
satelettronica

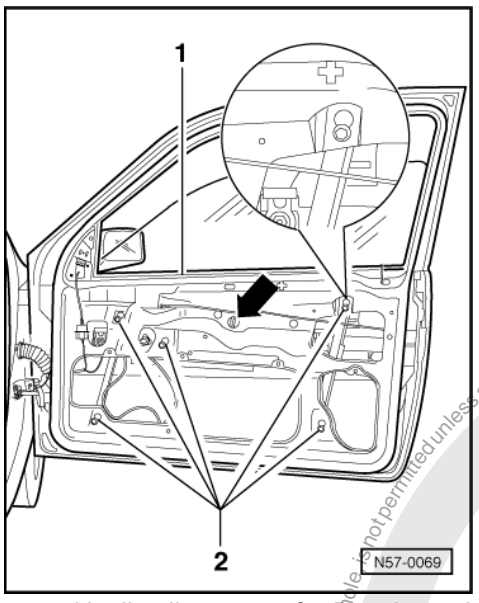

- -> Unclip clip -arrow- for Bowden cables.
- Loosen hexagon head screws -2- (10 Nm).
- Lift window lifter slightly so that hexagon head screws -2- can be pulled through installation openings.
- Separate window lifter motor connector on vehicles with electrical window lifters.
- Pull window lifter out downwards through installation opening.

Installing

- Install window lifter and adjust door window =>Page 174 .

2.7 - Servicing electric window lifters

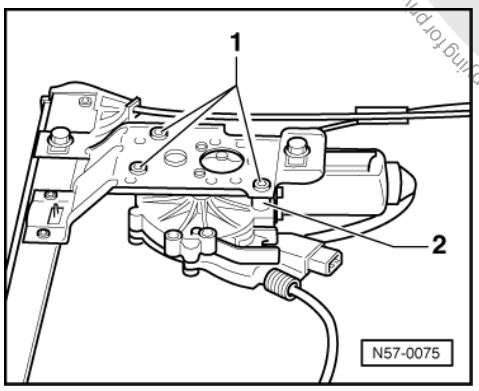

- Remove window lifter => Page 174 .
- -> Remove Qty. 3 cross-head screws -1- from the window lifter/lifter motor joint.
- Remove spacer sleeves -2-.

Protected by copyright. Copying for private or commercial purposes, in any form or medium is not permitted unless authorised by Volkswagen AG. Volkswagen AG does not guarantee or accept any liability with respect to the correctness of information in this document. Copyright by Volkswagen AG.
satelettronica

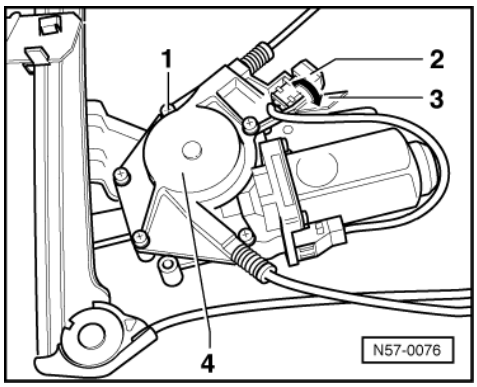

- -> Turn window lifter around and remove cross-head screws -1- (Qty. 5).
- Open hinge -3- and take connector -2- out of mounting.
- Pull the cable drum -4-, by hand, off the gear housing by tilting slightly in alternate directions.

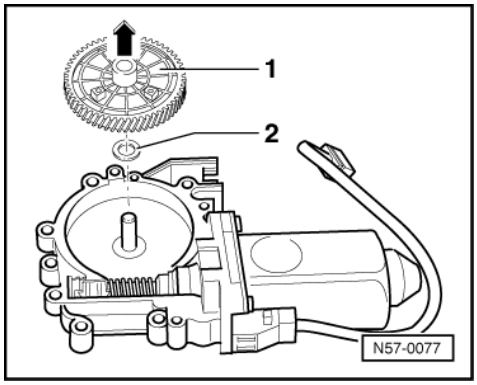

- -> Pull drive gear -1- off gear shaft in direction of arrow. Pay attention to spacer washer -2-.

Note:

The damper element -3- must fit exactly in the cable drum recesses.

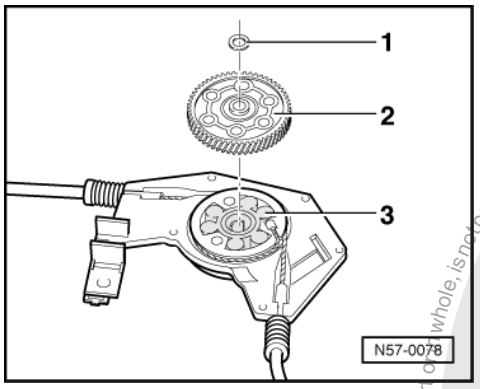

- -> Insert drive gear -2- into cable drum, fit spacer washer -1- onto drive gear.
- Pull fitting cover off new motor.

Note:

Surfaces/parts coated with grease must not come into contact with dust or dirt. Regreasing only with original grease G 000 450 02.

Protected by copyright. Copying for private or commercial purposes, in part or in whole, is not permitted unless authorised by Volkswagen AG. Volkswagen AG does not guarantee or accept any liability with respect to the correctness of information in this document. Copyright by Volkswagen AG.
satelettronica

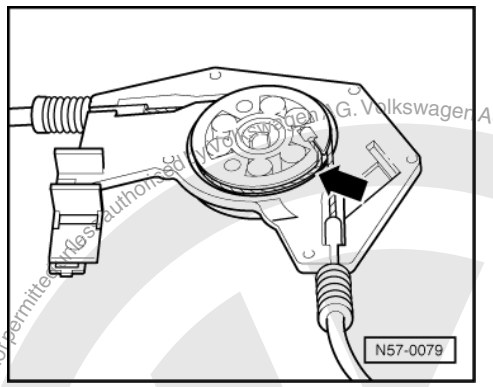

- -> Check that the cable is correctly positioned on the cable drum.
- Join cable drum and electric motor together.

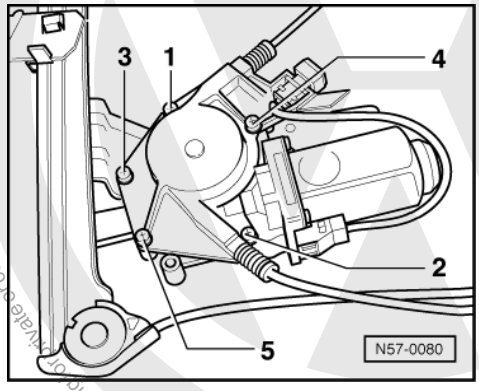

- If it is not possible to join together the gear housing and the cable drum as far as the stop, alter the position/ attitude of the drive gear by moving the motor slightly so that the drive gear engages.
- -> Screw in securing screws and tighten in the specified order (3 Nm).

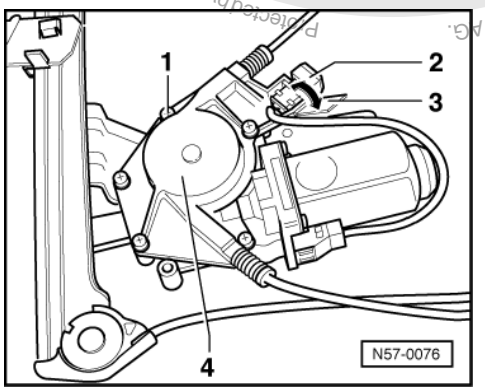

- -> Press connector -2- into housing and close hinge -3-.

Note:

Perform functional check before installing.

Replacement of the mechanical part (linkage/cable) is performed in the same manner.

Copyright by Volkswagen AG. Volkswagen AG does not guarantee or accept any liability with respect to the correctness of information in this document. Copyright by Volkswagen AG. Protected by copyright. Copying for private or commercial purposes, in part or in whole, is not permitted unless authorised by Volkswagen AG.
satelettronica

2.8 - Rear door window - Assembly overview

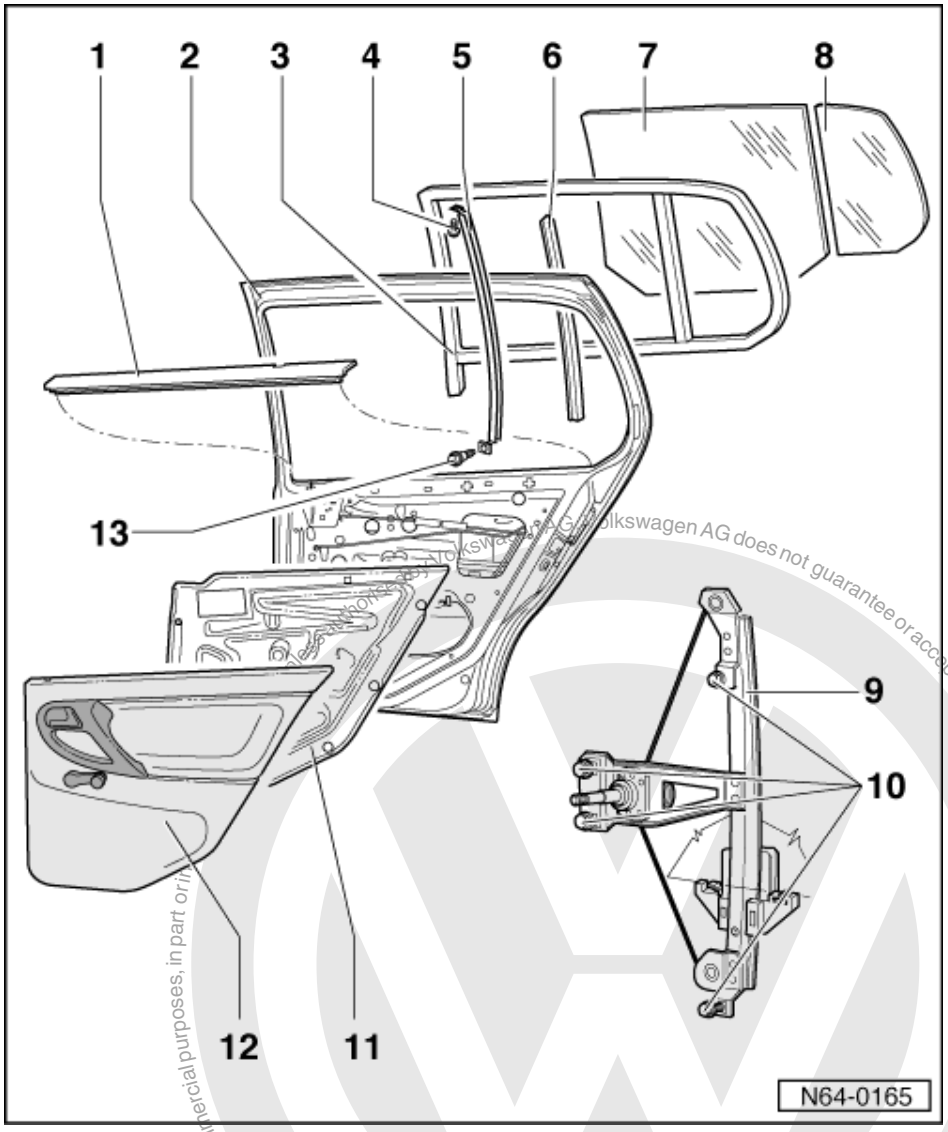

1 Window slot seal
- Pushed onto flange

2 Door

3 Window channel
- Buttoned into window frame
- Removing: only together with the triangular window

4 Phillips head screw
- 3.5 Nm

5 Centre divider strip

6 Window channel, divider strip
- Buttoned in centre connector

7 Door window
- Removing and installing => Page 179
- Fitting onto window lifter => Page 181

Protected by copyright. Copyright by Volkswagen AG.
Volkswagen AG does not guarantee or accept any liability with respect to the correctness of information in this document.
satelettronica

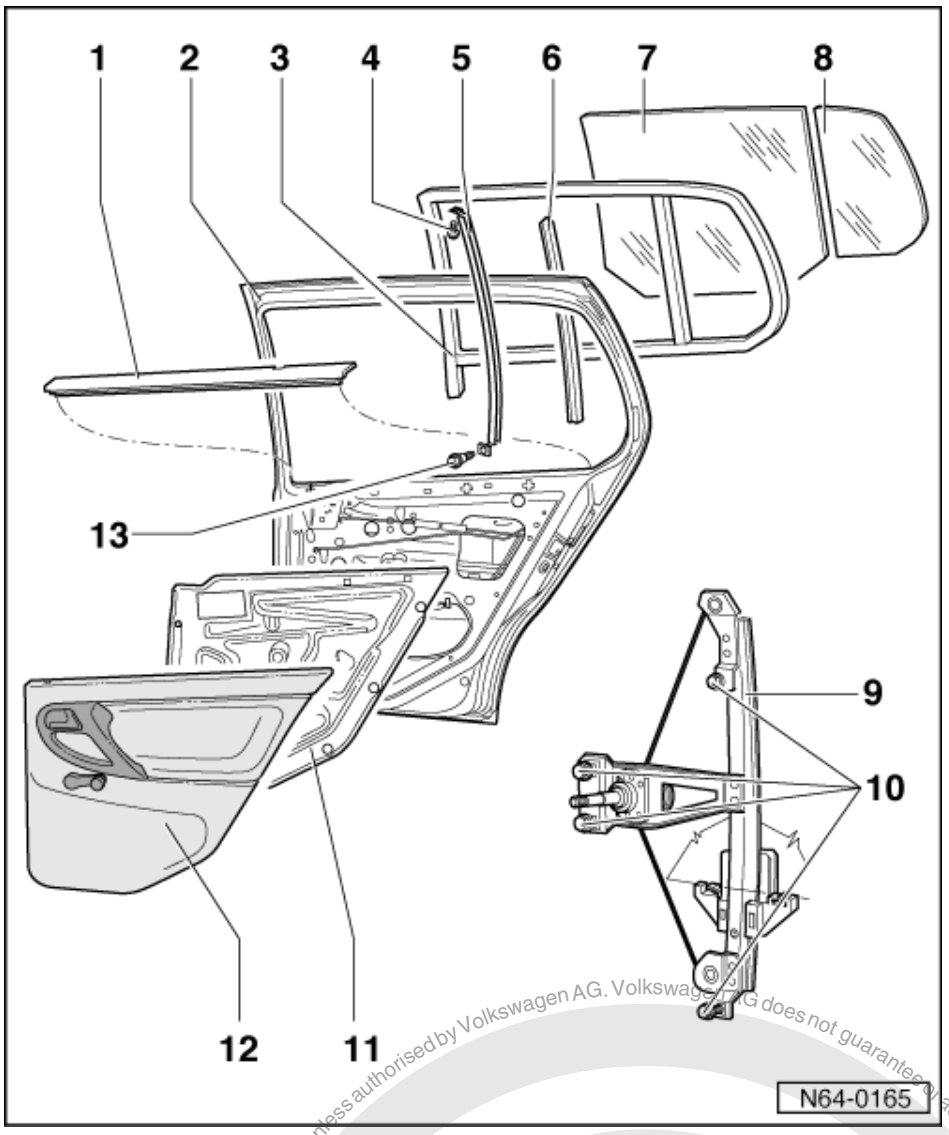

8 Triangular window
- Removing and installing
  => Page 183

9 Window lifter
- Removing and installing => Page 181

10 Hexagon head screws
- Only loosened for removal of window lifter
- 10 Nm

11 Insulation sheeting

12 Trim

13 Hexagon head screw
- 6 Nm

2.9 - Removing and installing door window

Removing

- Remove door trim and door insulation sheeting.

Protected by copyright. Copying for private or commercial purposes, in part or in whole is not permitted unless authorised by Volkswagen AG. Volkswagen AG does not guarantee or accept any liability with respect to the correctness of information in this document. Copyright by Volkswagen AG.
satelettronica

=> General body repairs, interior; Repair group 70; Door trim; Removing and installing front door trim Door trim Removing and installing front door trim

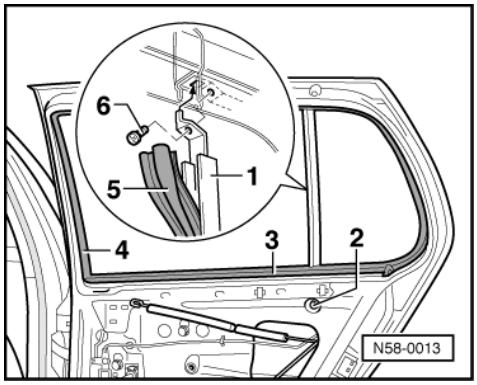

- -> Pull inner window slot seal -3- off flange.
- Pull off front window guide -4-.
- Unbutton window channel -5- out of divider strip -1-.
- Remove screws -2 and 6- for divider strip.

Note:

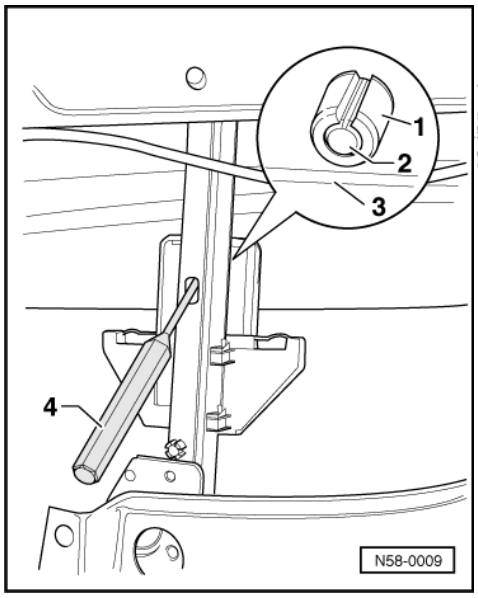

When pressing out the spreader pin and the spreader plug ensure that the door outer panel is not damaged.

- -> Press spreader pin -2- out of spreader plug -1- with a punch -4-.
- Press spreader plug -1- out of door window -3- with a punch -4-.
- Remove door window from window lifting rail, and push down fully.

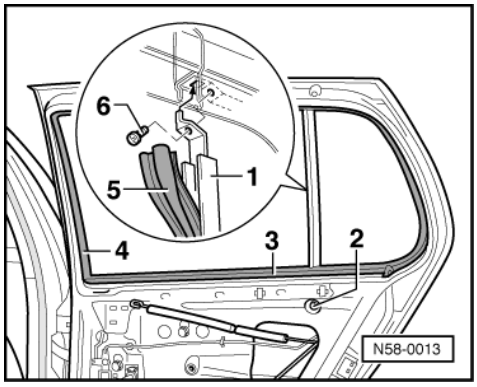

Protected by copyright. Copying for private or commercial purposes, in part or in whole, is not permitted unless authorised by Volkswagen AG. Volkswagen AG does not guarantee or accept any liability with respect to the correctness of information in this document. Copyright by Volkswagen AG.
satelettronica

- -> Pull divider strip -1- off triangular window and swing out of the door.
- Pull door window upwards out of the window slot.

Fitting instructions:

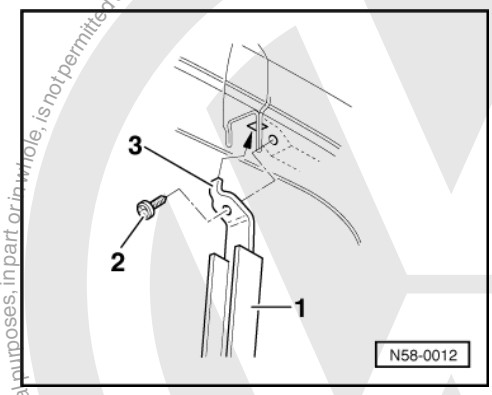

- -> Insert top of divider strip -1- with lug -3- in the door -arrow-.
- To ease fitting of divider strip and the channels a lubricant (cleaning agent) can be used.
- Fit door window to lifting rail =>Page 181 .

2.10 - Fitting door window to window lifter

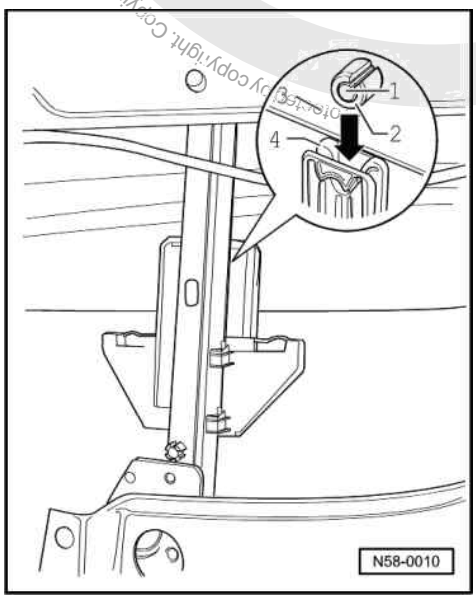

- -> Insert spreader plug -2- and spreader pin -1- in the window.
- Set spreader plug projection on each side of window.
- Guide window into door.
- Insert door -3- in the window lifting rail guide slot -4-.
- Lightly tap top of window, so that the window locates in lifting rail -arrow-.

2.11 - Removing and installing window lifters

Removing

- Remove door trim and door insulation sheeting.

satelettronica

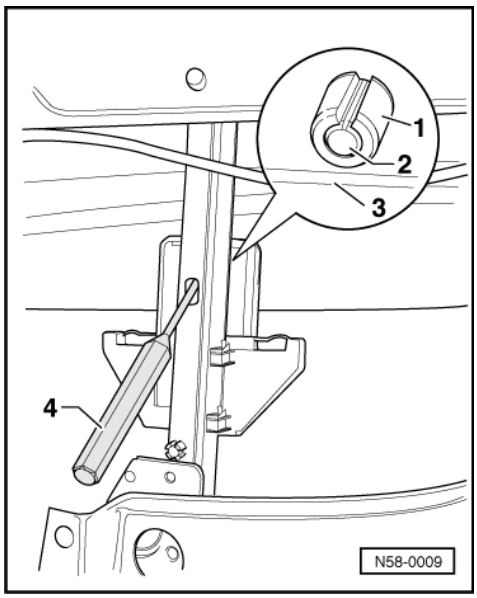

=> General body repairs, interior; Repair group 70; Door trim; Removing and installing front door trim

- Crank door window down.
- -> Press spreader pin -2- out of spreader plug -1- with a punch -4-.
- Press spreader plug -1- out of window -3- with apunch -4-.
- Push door window up and fix in position (e.g. with adhesive tape).

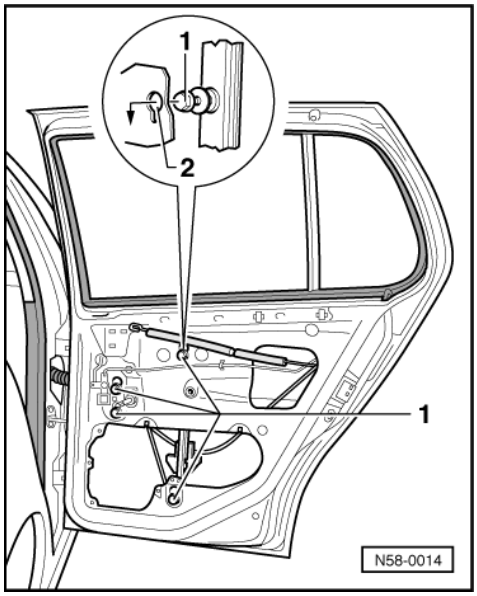

- -> Loosen hexagon head screws -1- (10 Nm).
- Lift window lifter slightly so that hexagon head screws -2- can be pulled through installation openings.
- Take window lifter out downwards through installation opening.

Installing

- Install window lifter.
- Fit window to window lifter =>Page 181 .

Protected by copyright. Copying for private or commercial purposes, in part or in whole, is not permitted unless authorised by Volkswagen AG. Volkswagen AG does not guarantee or accept any liability with respect to the correctness of information in this document. Copyright by Volkswagen AG.
satelettronica

2.12 - Removing and installing triangular window

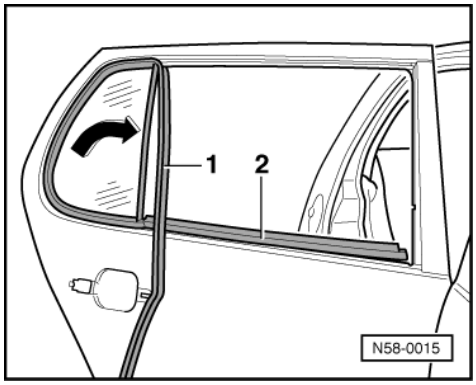

- Remove door window =>Page 179 .
- -> Pull off upper window guide -1- and lower window slot seal -2-.
- Swing triangular window out of window slot -arrow-.

Protected by copyright. Copying for private or commercial purposes, in part or in whole, is not permitted unless authorised by Volkswagen AG. Volkswagen AG does not guarantee or accept any liability with respect to the correctness of information in this document. Copyright by Volkswagen AG.

satelettronica

66 - Exterior equipment

1 - Roof moulding >09.99

1.1 - Roof moulding >09.99

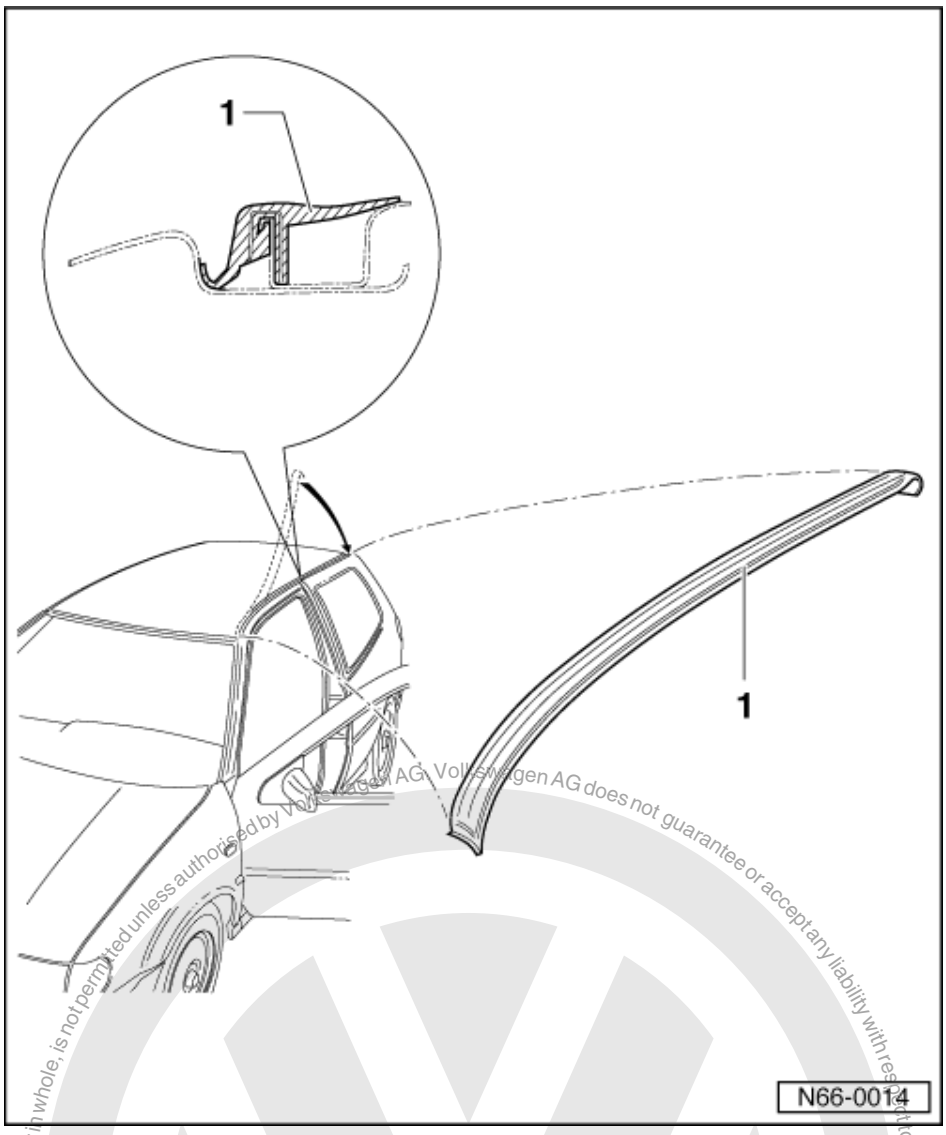

1.2 - Removing and installing moulding for roof

- Pull roof moulding -1- off from roof flange.

Installing

- Align roof moulding forward edge to roof edge (to guarantee a secure seating the roof moulding must lie flush against the roof edge).
- The roof moulding must be pressed from front to rear onto the roof flange.

satelettronica
Protected by copyright. Copying for private or commercial purposes, in part or in whole, is not permitted unless authorised by Volkswagen AG. Volkswagen AG does not guarantee or accept any liability with respect to the correctness of information in this document. Copyright by Volkswagen AG.

1.3 - Removing and installing roof moulding for door

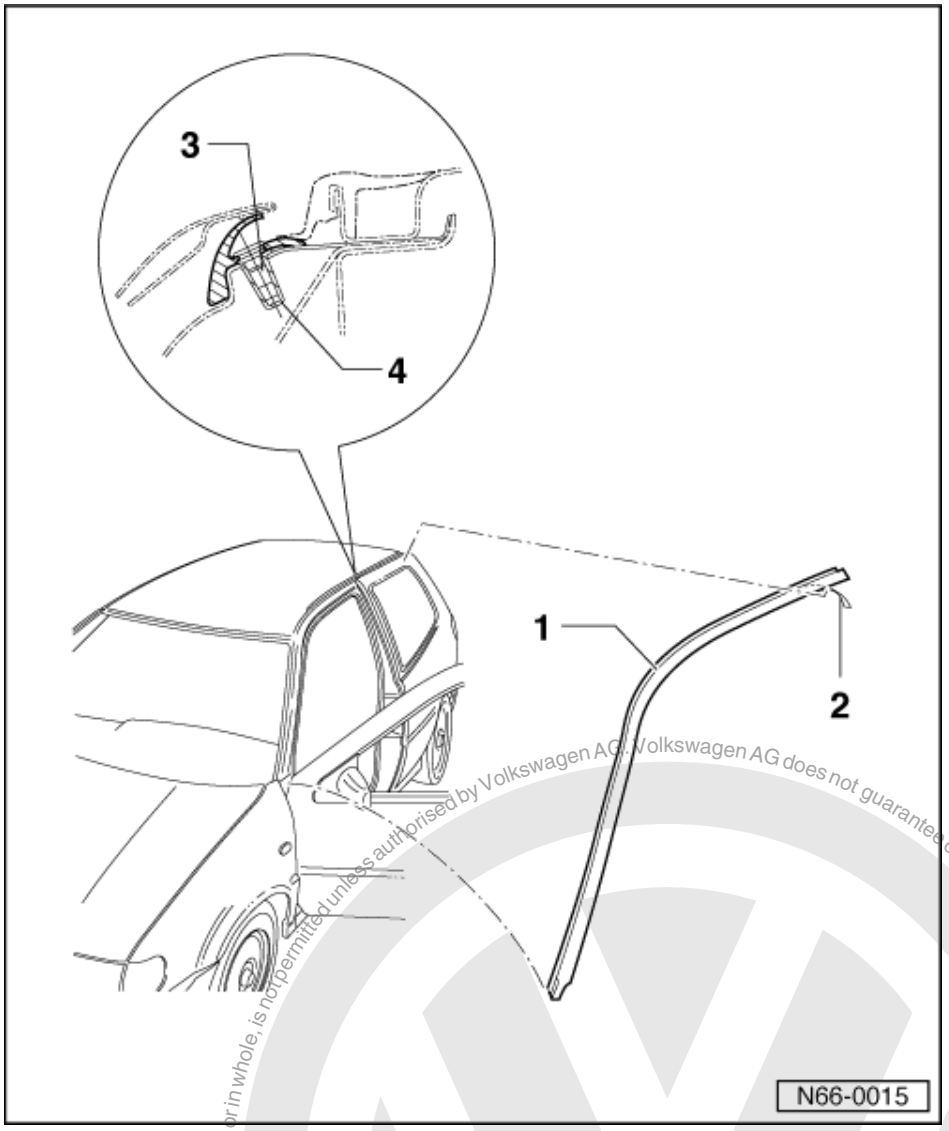

Moulding for roof removed

- Pull out securing clip -3-.
- Warm roof moulding for door -1- with a hot air blower before removing.

Installing

- Clean exterior panels with petrol, and afterwards treat with silicone remover and then rub dry.
- First locate roof moulding for door with securing clip -3- and then bond from clip to wing, piece for piece (areas must not be longer than 250 mm).
- Press complete roof moulding to door, on forcefully. Working temperature approx. 20° C.

Protected by copyright. Copying for private or commercial purposes, in part or in whole, is not permitted unless authorised by Volkswagen AG. Volkswagen AG does not guarantee or accept any liability with respect to the correctness of information in this document. Copyright by Volkswagen AG.
satelettronica

2 - Trim >09.99

2.1 - Trim >09.99

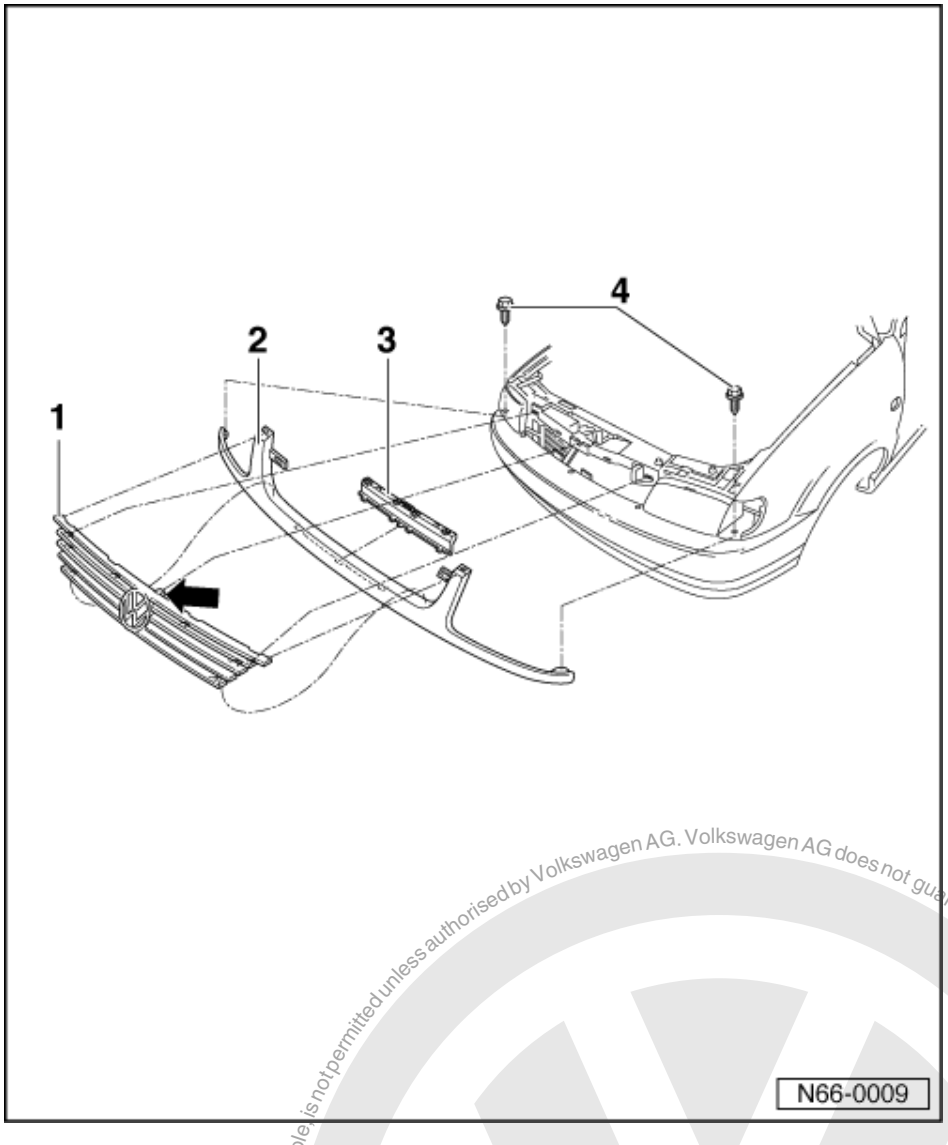

2.2 - Removing and installing radiator grille with trim frame

- Turn signals removed.
- Remove combi bolts -4-. Release locking lugs from deflector - 3 - (Qty. 2) and radiator grille - 1 - (Qty. 4) with a screwdriver.
- Pull radiator grille with trim frame off.

1 Radiator grille
- Material: ASA
- Removing: Release upper and lower locking lugs with a screwdriver. Pull radiator grille off trim frame.

Protected by copyright. Copying for private or commercial purposes, in part or in whole, is not permitted unless authorised by Volkswagen AG. Volkswagen AG does not guarantee or accept any liability with respect to the correctness of information in this document. Copyright by Volkswagen AG.

satelettronica

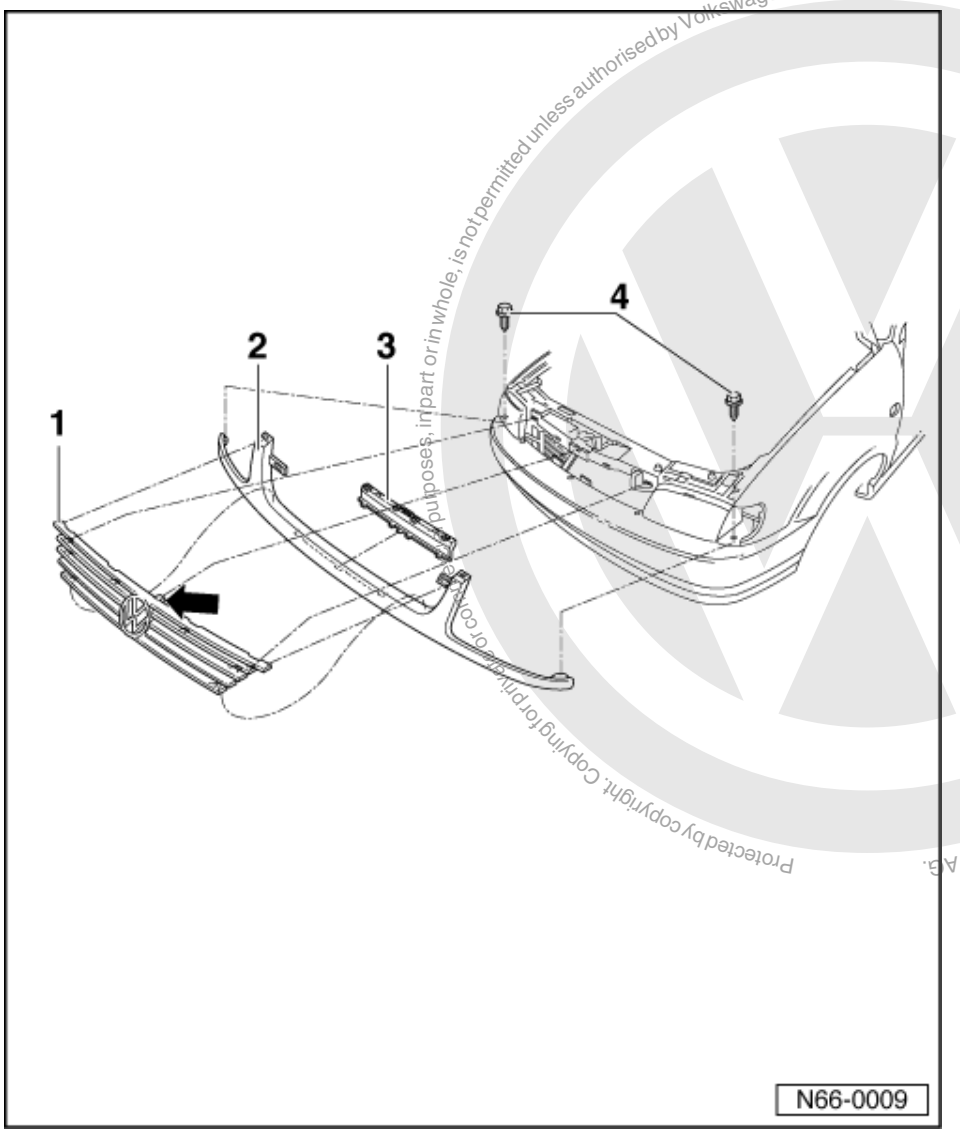

2 Trim frame
- In body-colour

3 Deflector
- The part has been gradually discontinued in series production.

4 Combi bolt

Protected by copyright. Copying for private or commercial purposes, in part or in whole, is not permitted unless authorised by Volkswagen AG. Volkswagen AG does not guarantee or accept any liability with respect to the correctness of information in this document. Copyright by Volkswagen AG.
satelettronica

3 - Protective strips

3.1 - Protective strips

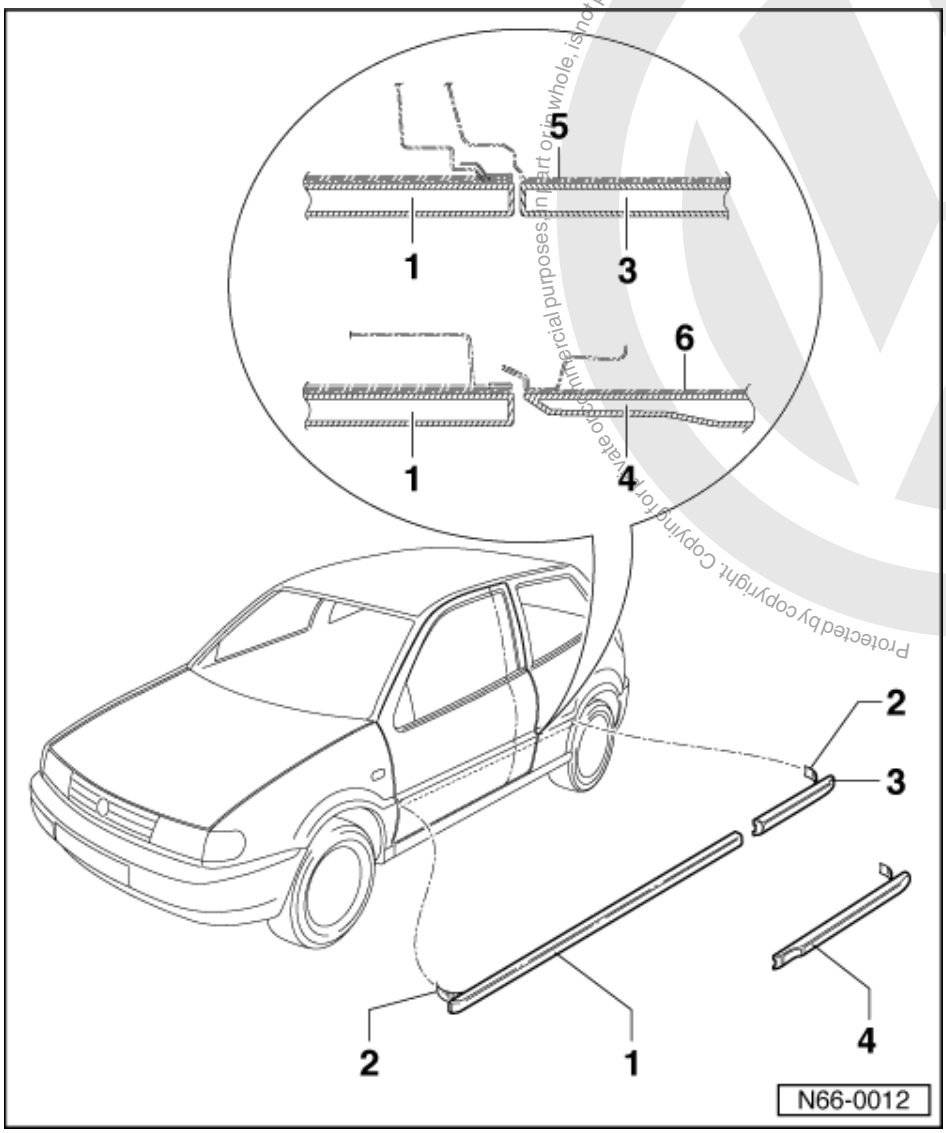

3.2 - Renewing side protective strips

- Warm side protective strip with hot air blower before removing.
- Clean exterior panels with petrol, and afterwards treat with silicone remover and then rub dry.
- Pull off protective foil, attach side protective strip lightly and then press forcefully on. Working temperature approx. 20° C.

1 Front door protective strip
- Self-adhesive
- Material PP/EPDM

2 Protective foil

Protected by copyright. Copying for private or commercial purposes, in part or in whole, is not permitted unless authorised by Volkswagen AG. Volkswagen AG does not guarantee or accept any liability with respect to the correctness of information in this document. Copyright by Volkswagen AG.
satelettronica

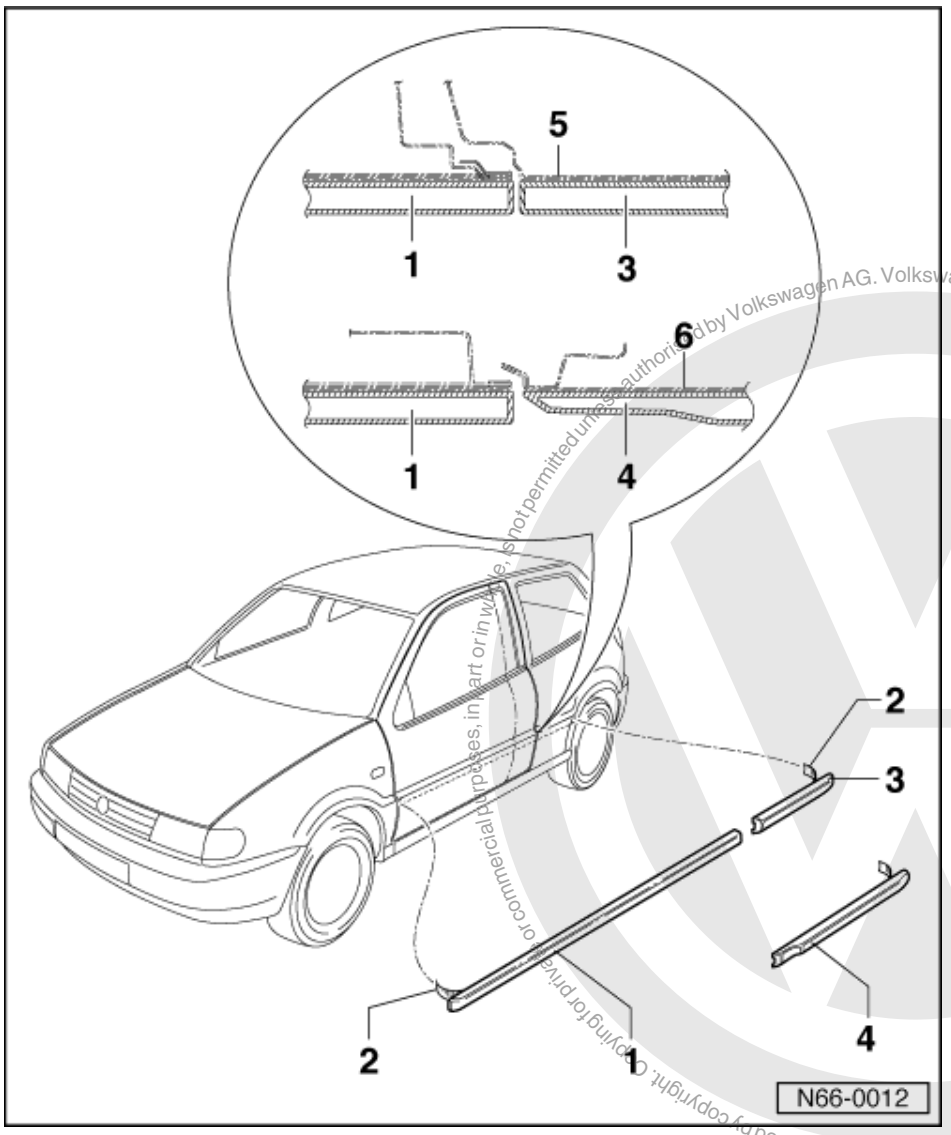

3 Side protective strip
- Self-adhesive
- Material PP/EPDM

4 Rear door protective strip
- Self-adhesive
- Material PP/EPDM

5 Side panel

6 Rear door

Protected by copyright. Copying for private or commercial purposes, in part or in whole, is not permitted unless authorised by Volkswagen AG. Volkswagen AG does not guarantee or accept any liability with respect to the correctness of information in this document. Copyright by Volkswagen AG.
satelettronica

4 - Removing and installing wheel housing liner

4.1 - Removing and installing wheel housing liner

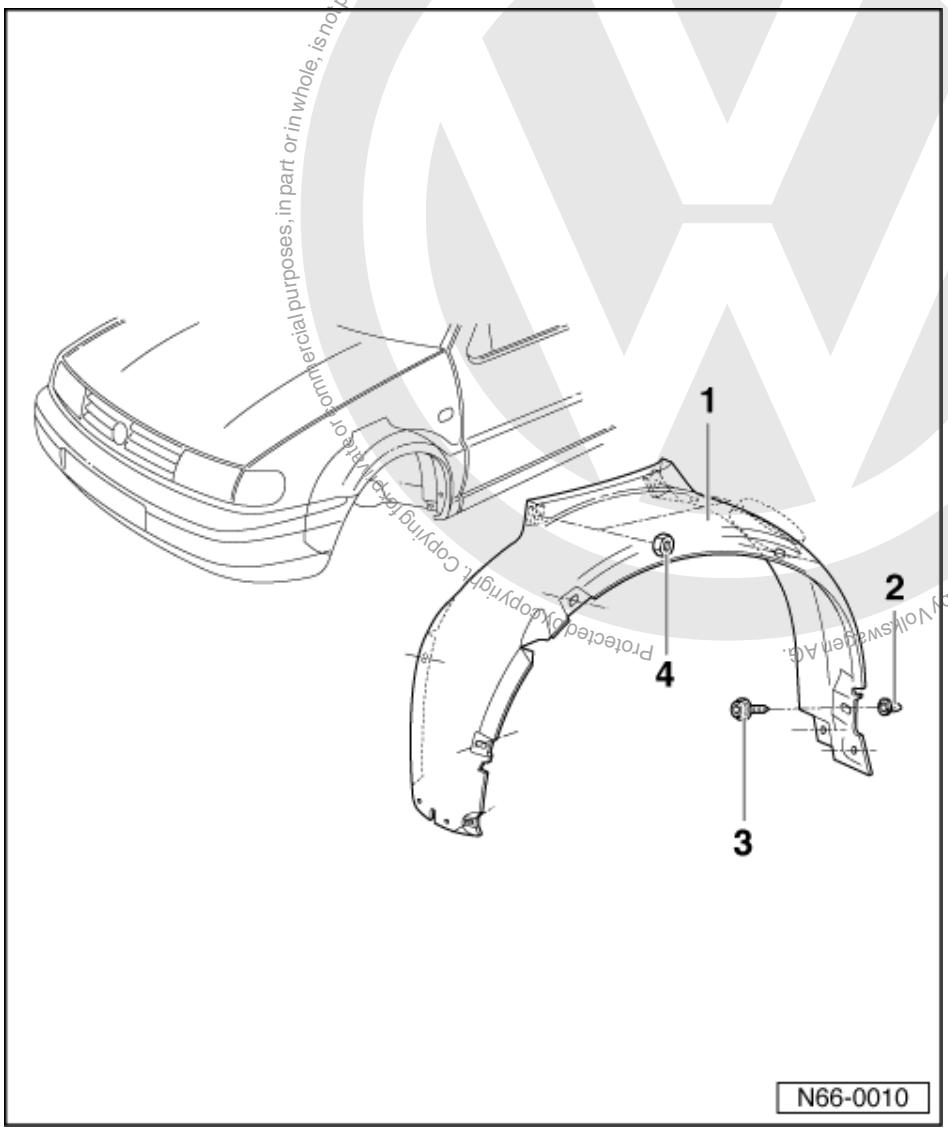

- Remove wheel. Tightening torque for wheel bolts = 110 Nm.
- Remove T 25 Torx screws -3- (Qty. 7) from expander nuts -2- (Qty. 7).
- Remove hexagon nuts -4.
- Pull wheel housing liner -1- out of wheel housing.

Protected by copyright. Copying for private or commercial purposes, in part or in whole, is not permitted unless authorised by Volkswagen AG. Volkswagen AG does not guarantee or accept any liability with respect to the correctness of information in this document. Copyright by Volkswagen AG.
satelettronica

5 - Rear view mirror >09.99

5.1 - Rear view mirror >09.99

5.2 - Tools

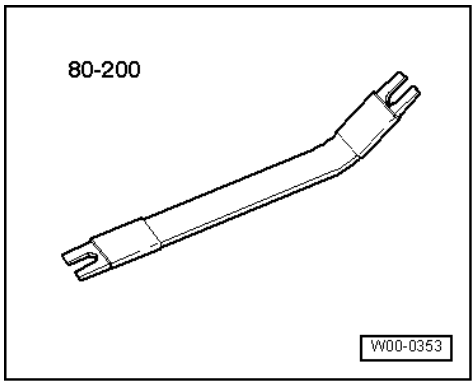

Special tools, workshop equipment, testers, measuring instruments and auxiliary items required

- 80-200 Removal lever

Protected by copyright. Copying for private or commercial purposes, in part or in whole, is not permitted unless authorised by Volkswagen AG. Volkswagen AG does not guarantee or accept any liability with respect to the correctness of information in this document. Copyright by Volkswagen AG.

satelettronica

5.3 - Assembly overview

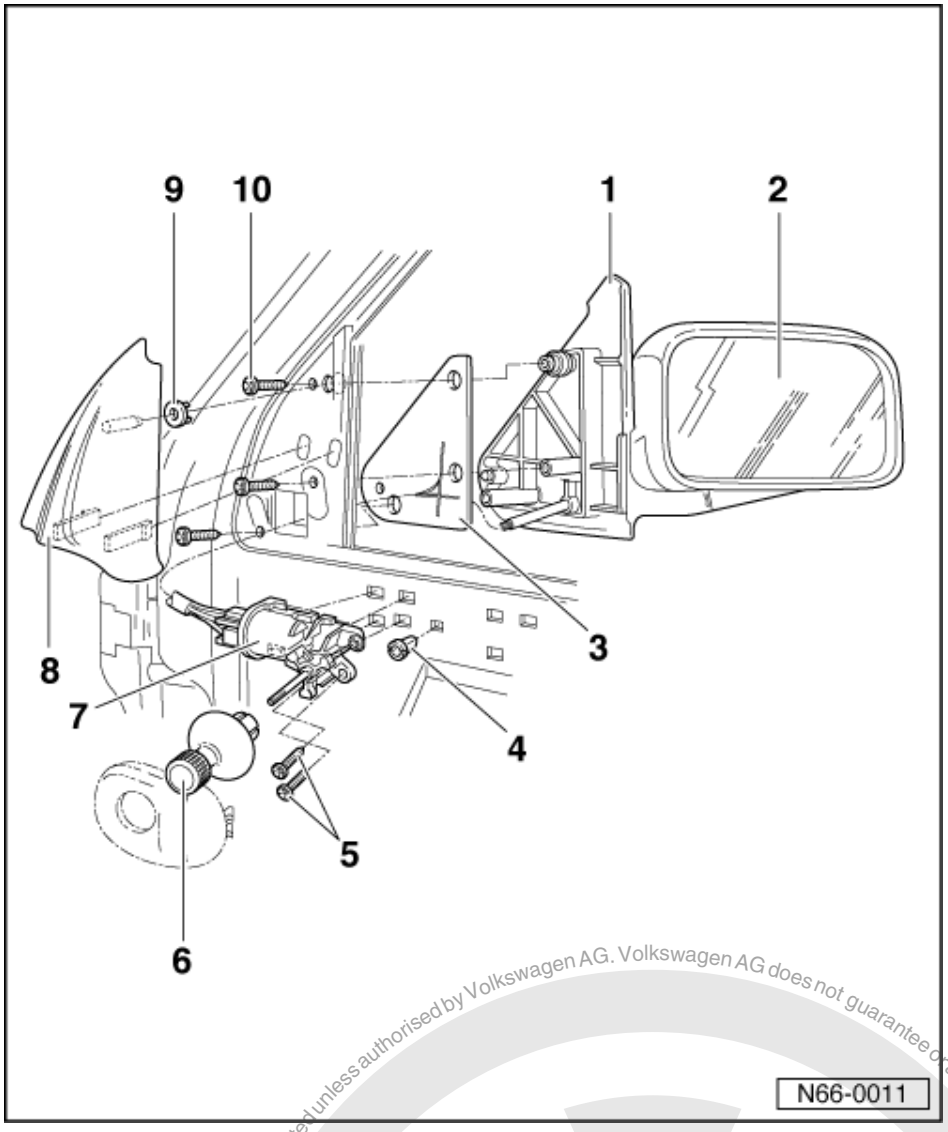

Note:

To remove, the front door trim panel must be taken off first of all.

1 Mirror housing
2 Mirror glass
- Clipped in in the case of both versions (adjustable manually and electrically)
- Removing - first, press mirror down then up (special tool 80-200). Protect mirror housing from damage
- Installing - insert mirror with guide studs into mounts and press on
- Press only on centre of mirror - always use protective gloves

Protected by copyright. Copying for private or commercial purposes, in part or in whole, is not permitted unless authorised by Volkswagen AG. Volkswagen AG does not guarantee or accept any liability with respect to the correctness of information in this document. Copyright by Volkswagen AG.
satelettronica

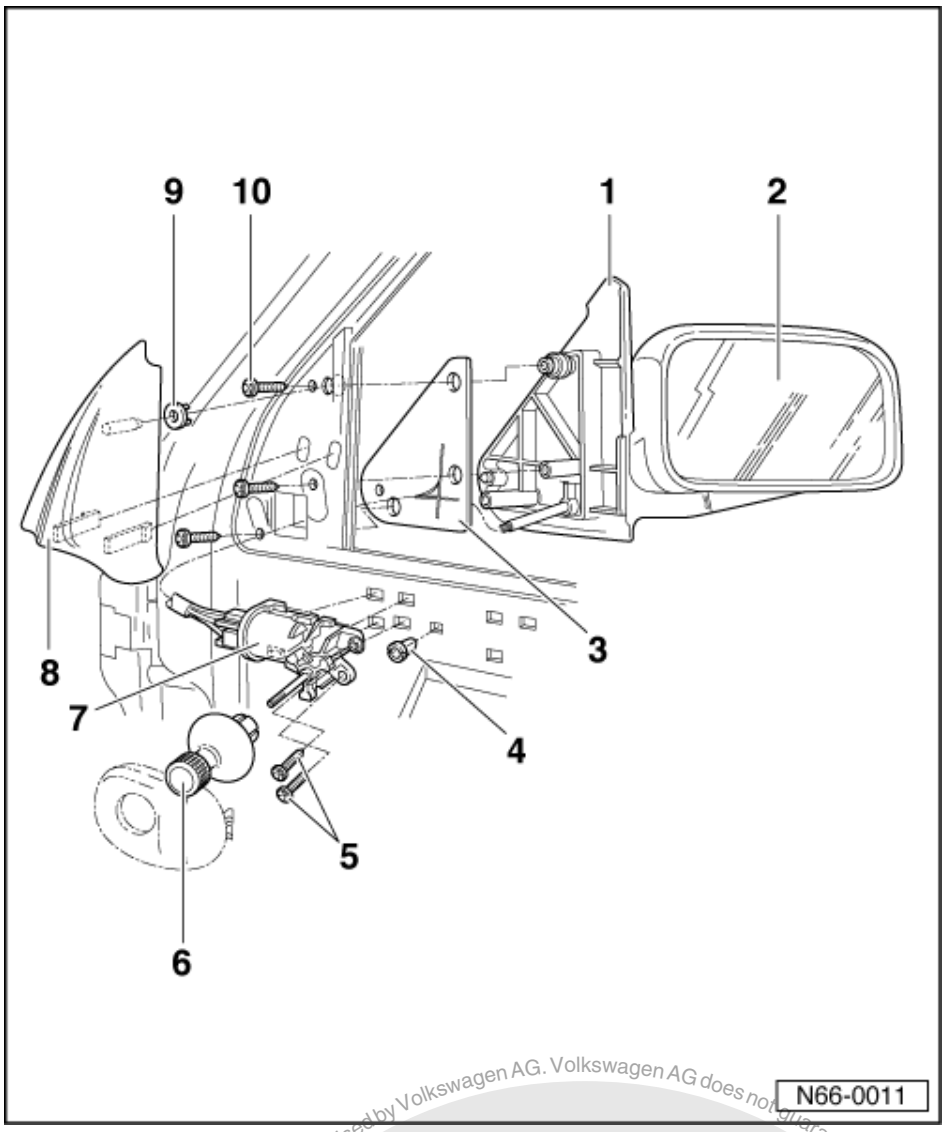

3 Mirror baseplate
4 Spreader nut
5 Phillips head screw
6 Control knob
- Pushed onto control

7 Mechanism (manual)
8 Cover
9 Clip
10 Oval-head screw
- 3 Nm

satelettronica
Protected by copyright. Copying for private or commercial purposes, in part or in whole, is not permitted unless authorised by Volkswagen AG. Volkswagen AG does not guarantee or accept any liability with respect to the correctness of information in this document. Copyright by Volkswagen AG.

6 - Rear view mirror 10.99 >

6.1 - Rear view mirror 10.99 >

6.2 - Removing mirror housing

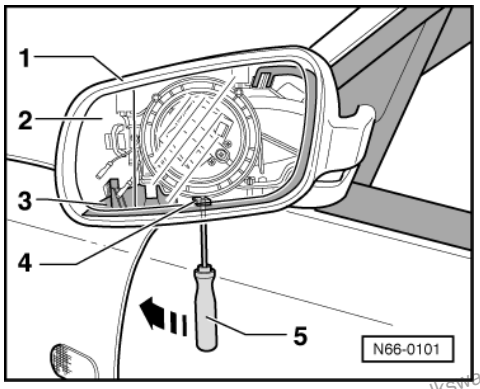

- Fold rear view mirror forwards to ease dismantling/assembly procedure.
- -> Position mirror glass -2- vertical (otherwise mirror housing can catch on mirror glass when pulling off).
- Insert screwdriver -5- through assembly hole of mirror carrier up to clip -4-.
- Press screwdriver -5- in direction of arrow (this will cause the clip -4- to release the mirror housing).

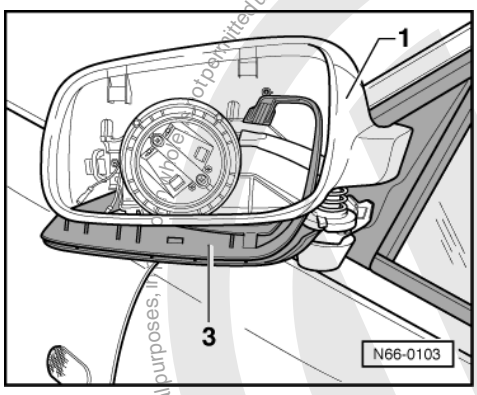

- -> Pull mirror housing -1- off mirror carrier -3- upwards.

Protected by copyright. Copying for private or commercial purposes, in part or in whole, is not permitted unless authorised by Volkswagen AG. Volkswagen AG does not guarantee or accept any liability with respect to the correctness of information in this document. Copyright by Volkswagen AG.
satelettronica

7 - Spoiler >09.99

7.1 - Spoiler >09.99

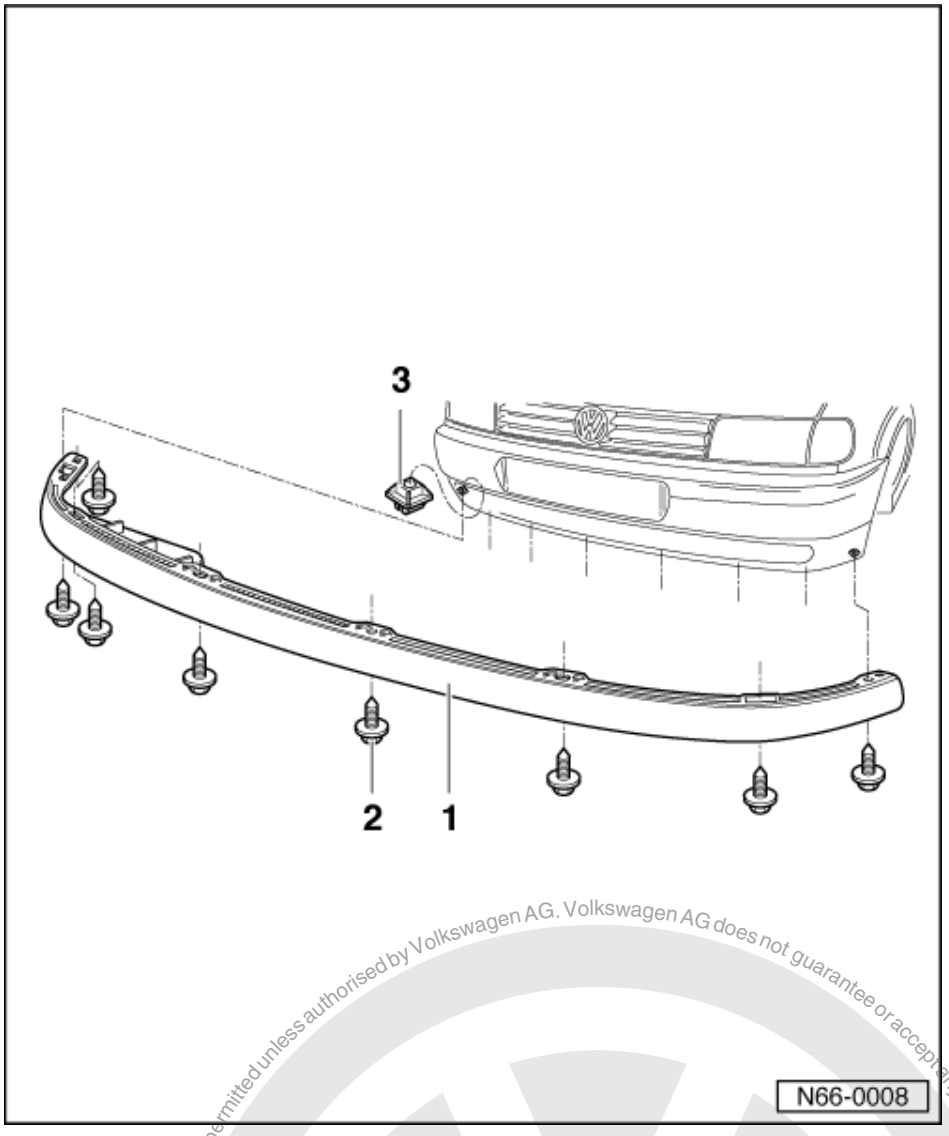

7.2 - Removing and installing front spoiler

1 Front spoiler
- Removing: Remove hexagon bolts -2- from spreader nuts -3- and take front spoiler off cross panel.

2 Hexagon bolt
- 5 Nm

3 Spreader nut

Protected by copyright. Copying for private or commercial purposes, in whole, is not permitted unless authorised by Volkswagen AG. Volkswagen AG does not guarantee or accept any liability with respect to the correctness of information in this document. Copyright by Volkswagen AG.
satelettronica

8 - Rear spoiler

8.1 - Rear spoiler

8.2 - Tools

Special tools, workshop equipment, testers, measuring instruments and auxiliary items required

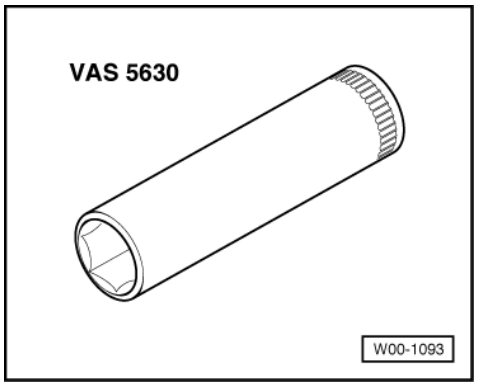

- VAS 5630 Socket insert

Protected by copyright. Copying for private or commercial purposes, in part or in whole, is not permitted unless authorised by Volkswagen AG. Volkswagen AG does not guarantee or accept any liability with respect to the correctness of information in this document. Copyright by Volkswagen AG.

satelettronica

8.3 - Rear spoiler

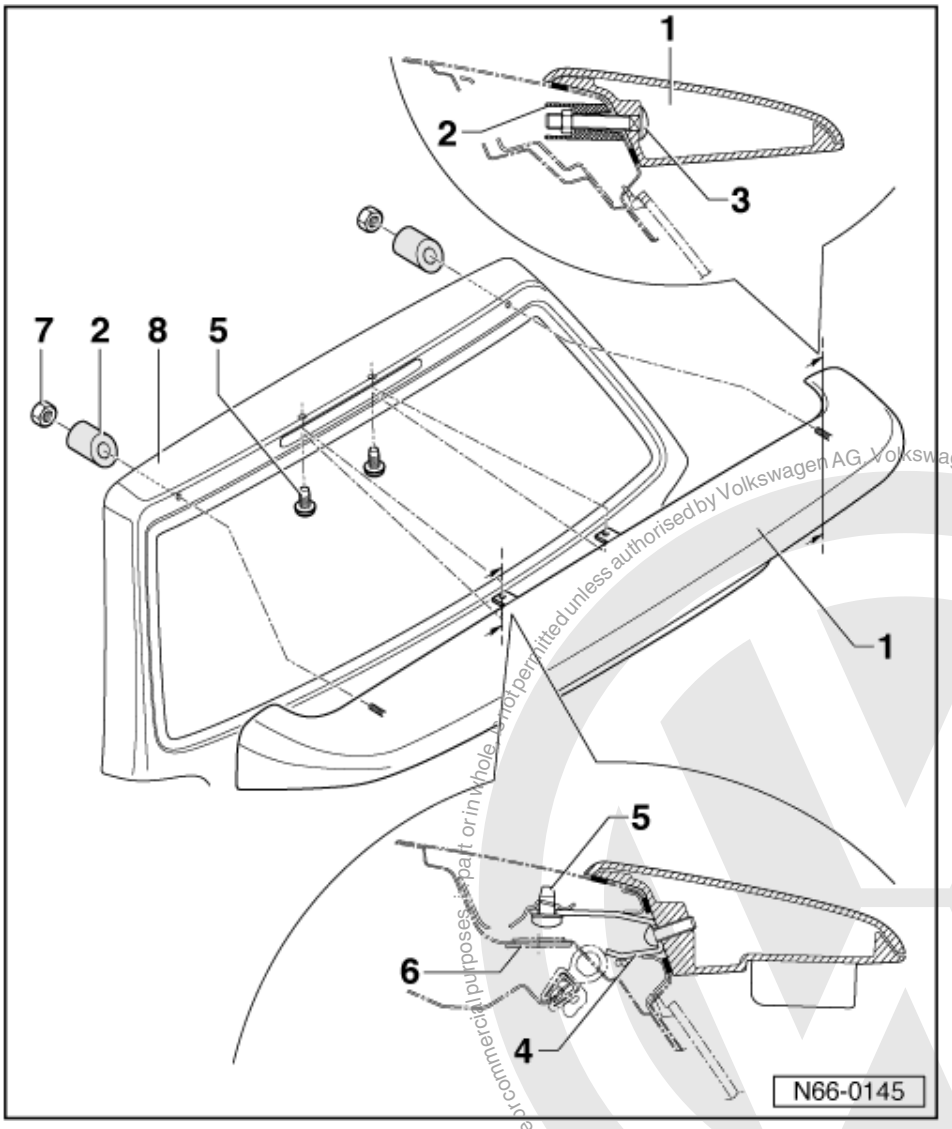

8.4 - Assembly overview

1 Rear spoiler
2 Sleeve
- Renew if damaged

3 Coach bolt
- Part of spoiler

4 Retaining bracket
- Part of spoiler

5 Screw
- 2.8 Nm

6 Cover cap
7 Hexagon nut
- 4.5 Nm
- With washer

8 Boot lid

Protected by copyright. Copying for private or commercial purposes, in part or in whole, is not permitted unless authorised by Volkswagen AG. Volkswagen AG does not guarantee or accept any liability with respect to the correctness of information in this document. Copyright by Volkswagen AG.
satelettronica

Protected by copyright. Copying for private or commercial purposes, in part or in whole, is not permitted unless authorised by Volkswagen AG. Volkswagen AG does not guarantee or accept any liability with respect to the correctness of information in this document. Copyright by Volkswagen AG.

8.5 - Removing and installing rear spoiler 10.99 >

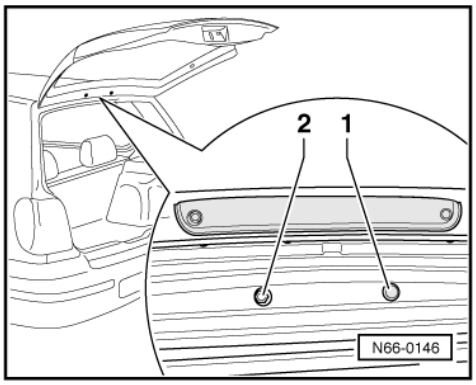

Removing

- -> Lever off cover caps -1- and remove bolts -2- (the illustration only shows 1 of each part).

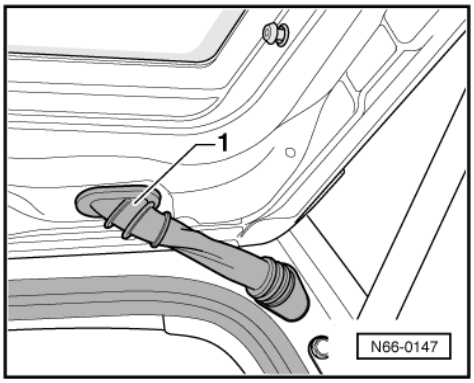

- -> Pull bellows -1- off flap.

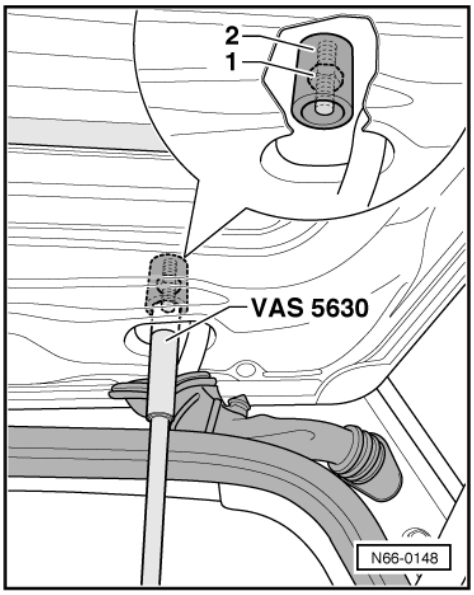

- -> Remove hexagon nut -1- using socket insert VAS 5630.

satelettronica

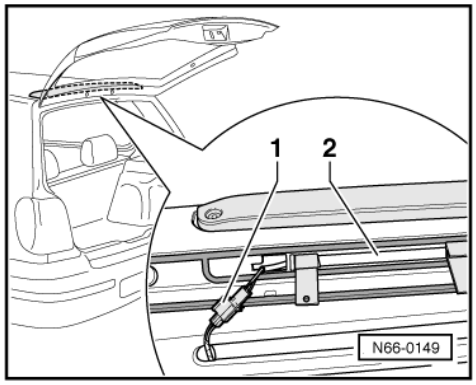

- -> Remove spoiler from flap and separate brake light connection -1-.

Installing

Note:

Before installing check sleeves for damage, replace if necessary.

Install in reverse order.

Protected by copyright. Copying for private or commercial purposes, in part or in whole, is not permitted unless authorised by Volkswagen AG. Volkswagen AG does not guarantee or accept any liability with respect to the correctness of information in this document. Copyright by Volkswagen AG.

satelettronica